GE Healthcare

Technical Publications

Direction Direction 5314624-100
Rev. 2

LOGIQ e

Quick Guide

Copyright 2008 By General Electric Co.

Operating Documentation

Regulatory Requirement

LOGIQ e complies with regulatory requirements of the following European Directive 93/42/EEC concerning medical devices.

CE 0197

Manufacturer

GE Medical Systems (China) Co., Ltd.
No. 19 Changjiang Road
Wuxi National Hi-Tech Development Zone
Jiangsu, P.R.China 214028
Tel: +86 510 85225888; Fax: +86 510 85226688

GE Healthcare

GE Medical System: Telex 3797371
P. O. Box 414, Milwaukee, Wisconsin 53201 U.S.A.
(Asia, Pacific, Latin America, North America)

GE Ultraschall:Tel: +33 (0) 130 831 300
Deutschland GmbH & Co KG
Beethovenstrabe 239, Postfach 11 05 60
D-42655 Solingen, Germany

Revision History

REV	DATE	REASON FOR CHANGE
1	Aug 14th, 2008	Initial Release
2	Sep 19th, 2008	Update for Touch Screen

List of Effective Page

PAGE NUMBER	REVISION HISTORY
Title	Rev. 2
A and B	Rev. 2
1-62	Rev. 2

Please verify that you are using the latest revision of this document. Information pertaining to this document is maintained on MyWorkshop/ ePDM (GE Healthcare electronic Product Data Management). If you need to know the latest revision, contact your distributor, local GE Sales Representative or in the USA call the GE Ultrasound Clinical Answer Center at 1-800-682-5327 or 262-524-5698.

CAUTION

FOR USA ONLY

“United Sates law restricts this device to sale or use by or on the order of a physician” if sold in the United States.

Installation Guide

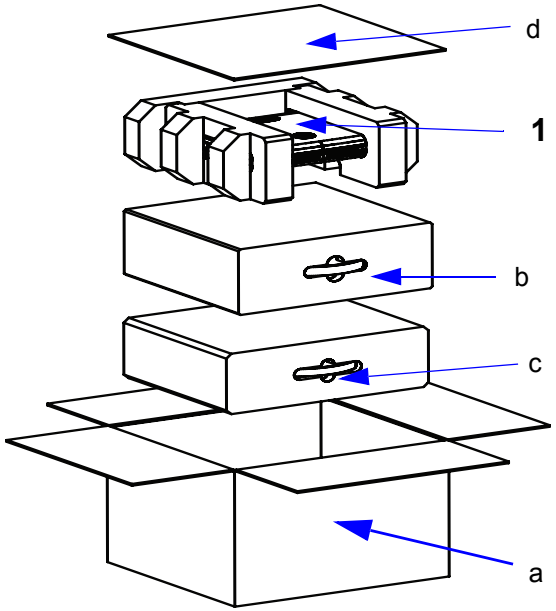

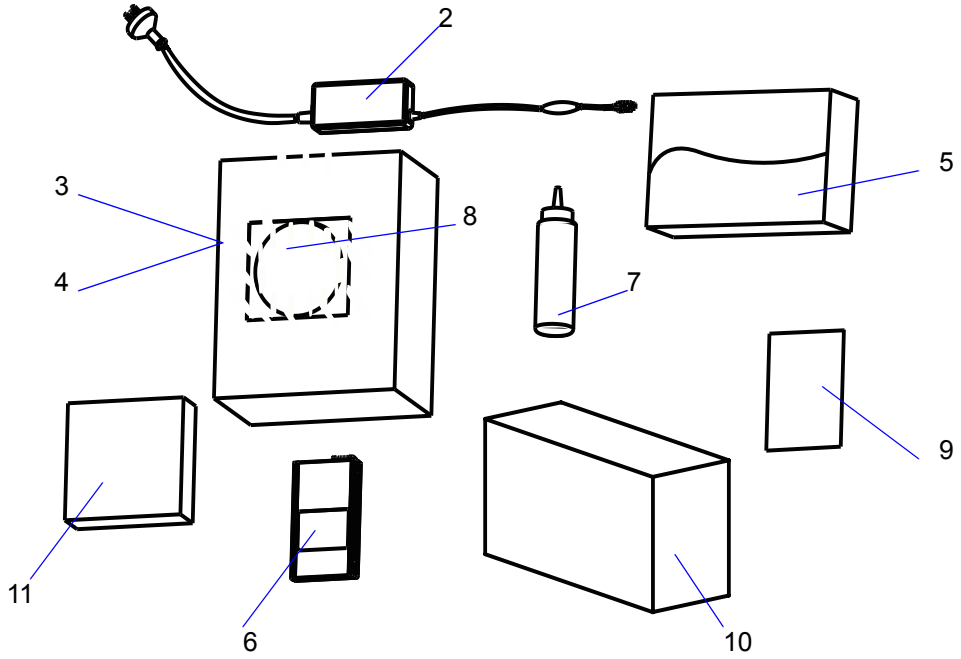

LOGIQ e Checklist

1. LOGIQ e System, Console and interleavers
2. AC Adapter
3. Basic User Manual
4. Basic Service Manual
5. Document Kit package
6. Battery
7. Acoustic Gel
8. Software DVD (System and Application Software DVD)
9. Basic color software certificate
10. DVD-RW
11. Foot Switch (Option)

a. Reusable LOGIQ e packaging
b. Interleaver
c. Accessories Package
d. Paper Pad

NOTE: The probe(s) storage case *is in the separate box from the LOGIQ e's packaging.*

NOTE: For DVD-RW, the LOGIQ e *supports CD-R/ DVD-R; CD-RW/DVD-RW IS NOT currently supported.*

Installation Guide (continued)

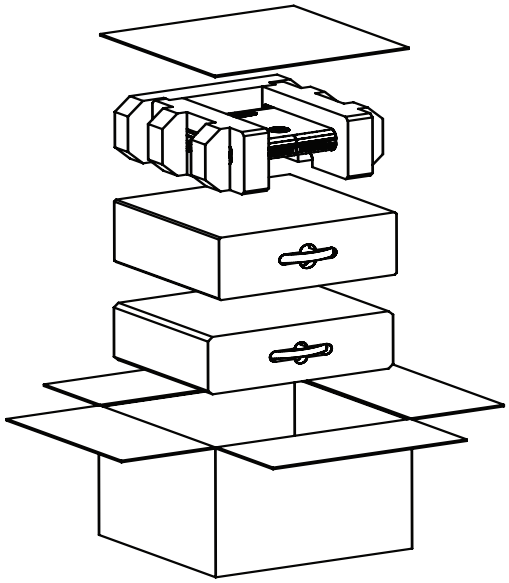

Figure 1. Step 1

Step 1, Unpack the system. Take out the system and accessories boxes.

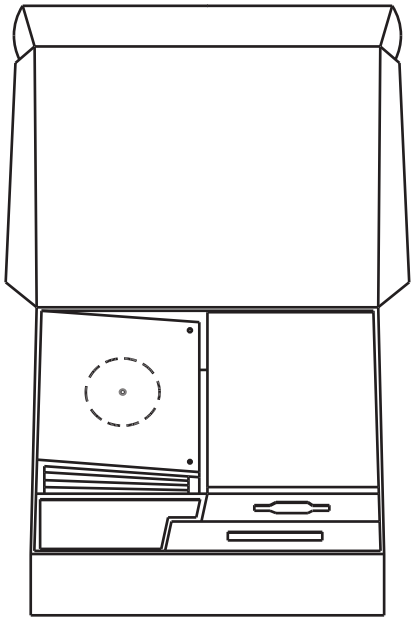

Figure 2. Step 2

Step 2, Unpack the accessories box. Set aside the following items, which you will need to complete the setup of your LOGIQ e system:

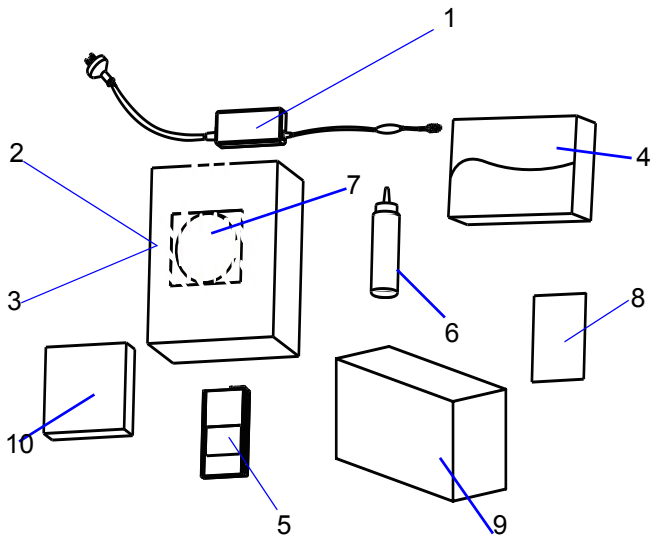

1. AC Adapter
2. Basic User Manual
3. Basic Service Manual
4. Document Kit package
5. Battery
6. Acoustic Gel
7. Software DVD (System and Application Software DVD)
8. Basic color software certificate
9. DVD-RW
10. Foot Switch (Option)

NOTE: Please unpack the system carefully. DO NOT dispose of the LOGIQ e packaging container so that it can be reused for service purposes.

Installation Guide (continued)

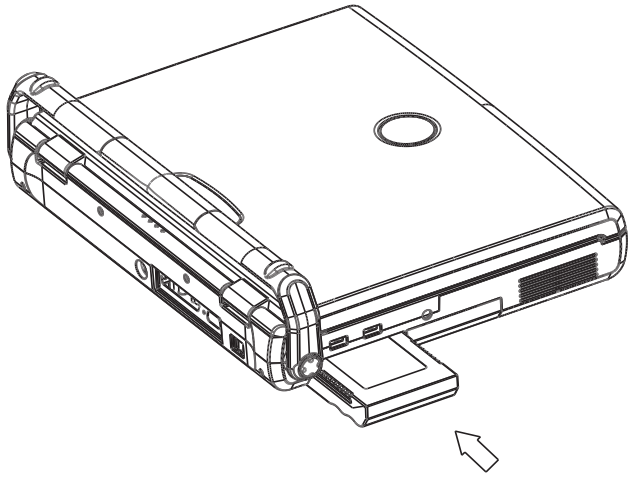

Figure 3. Step 3

Step 3, Install the battery with the label side upward.

NOTE: The battery may be partially discharged.

CAUTION

Upon receipt of the LOGIQ e and before 1st time use, it is highly recommended that the customer performs 1 full discharge / charge cycle. If the battery has not been used for > 2 months, the customers are recommended to perform 1 full discharge / charge cycle. Battery is also recommended to be stored in a shady and cool area with FCC (Full Current Capacity).

One Full Discharge/Charge Cycle Process:

1. Full discharge of battery to let the LOGIQ e automatically shut down.
2. Charge LOGIQ e to 100% FCC (Full Current Capacity).
3. Discharge of LOGIQ e for complete shut down (takes 1hr for discharge).

Whole process (Step1-3) will be completed around in 5 hours.

Installation Guide (continued)

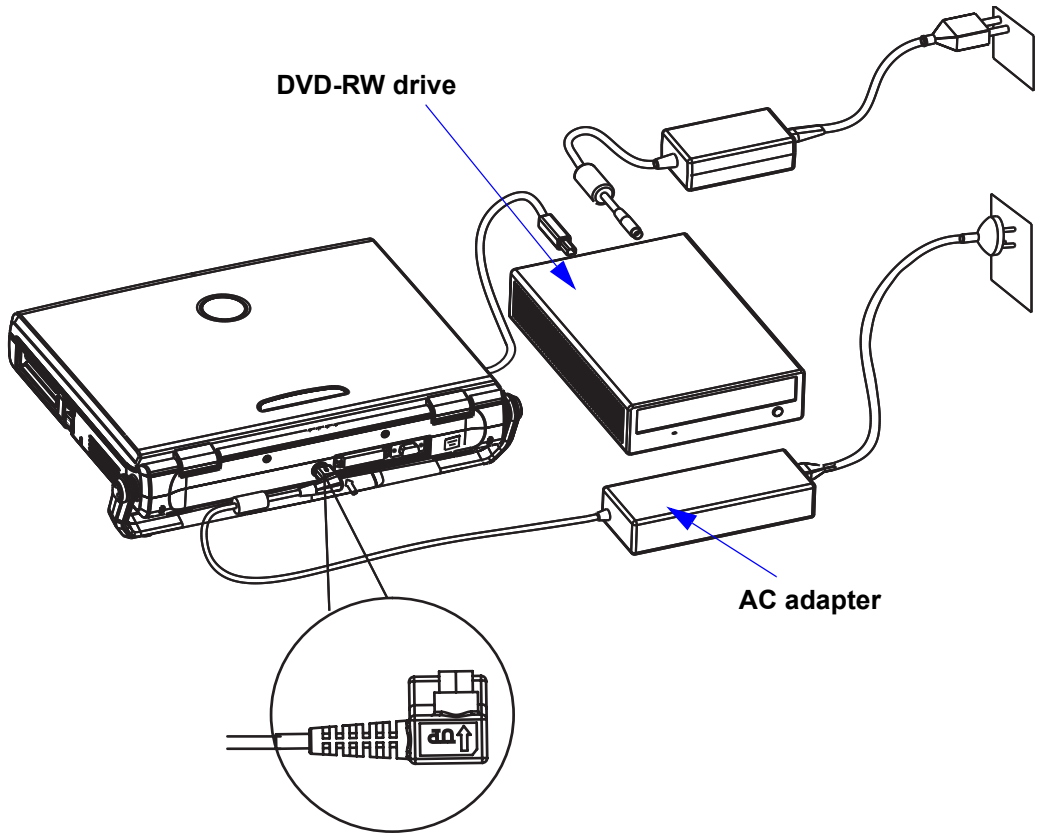

Figure 4. Step 4 and step 5

Step 4, Rotate the handle downward to the bottom

NOTE: Keep the handle downward to the bottom, when the AC adapter power cord is connected with an electrical outlet.

Step 5, Plug the AC adapter output connector into the system DC input port (located on the system's rear panel) with the arrow side upward. Plug the AC adapter power cord into a grounded, protective earth outlet.

NOTE: Connect the DVD-RW drive to the Serial port for Backup and Restore, Tutorials, and for loading software, but do not use DVD-RW when scanning.

Installation Guide (continued)

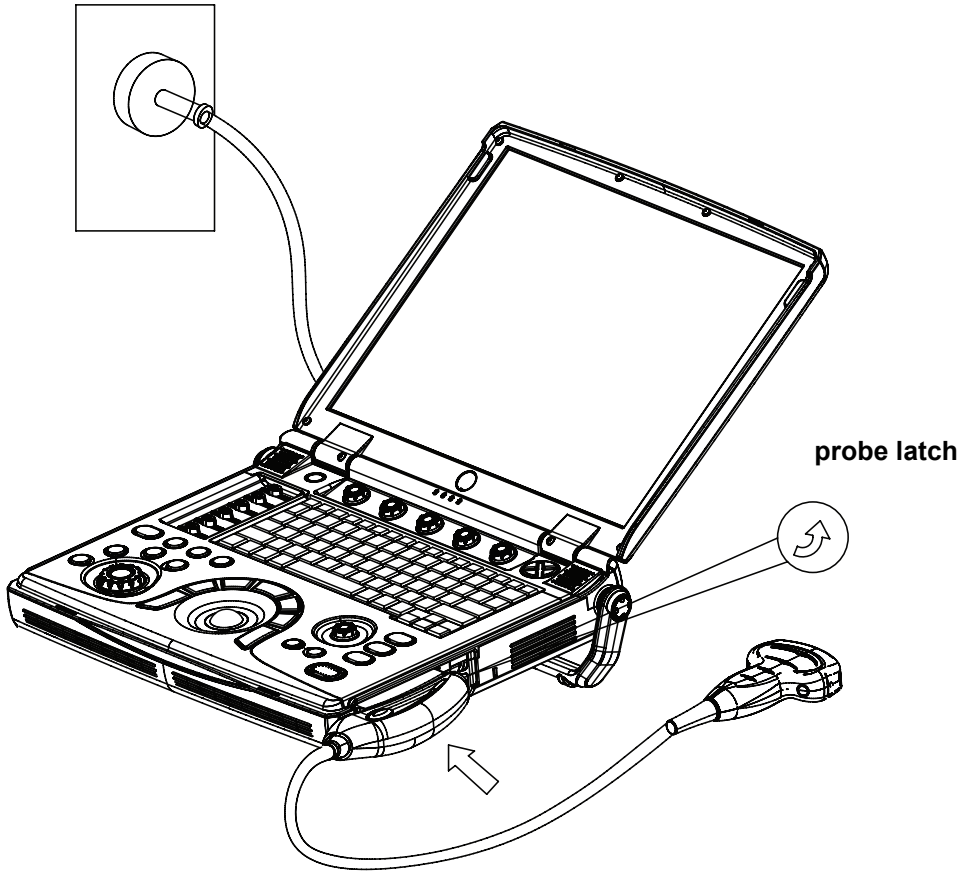

Figure 5. Step 6

Step 6, Carefully open the system LCD display, plug the probe connector into the probe port, then lock the probe latch upward.

NOTE: Please ensure that the probe latch is in an unlocked position before you connect the probe to the system.

NOTE: To avoid damage, DO NOT push the LCD too much when the viewing angle is at its maximum angle (160 degrees).

Installation Guide (continued)

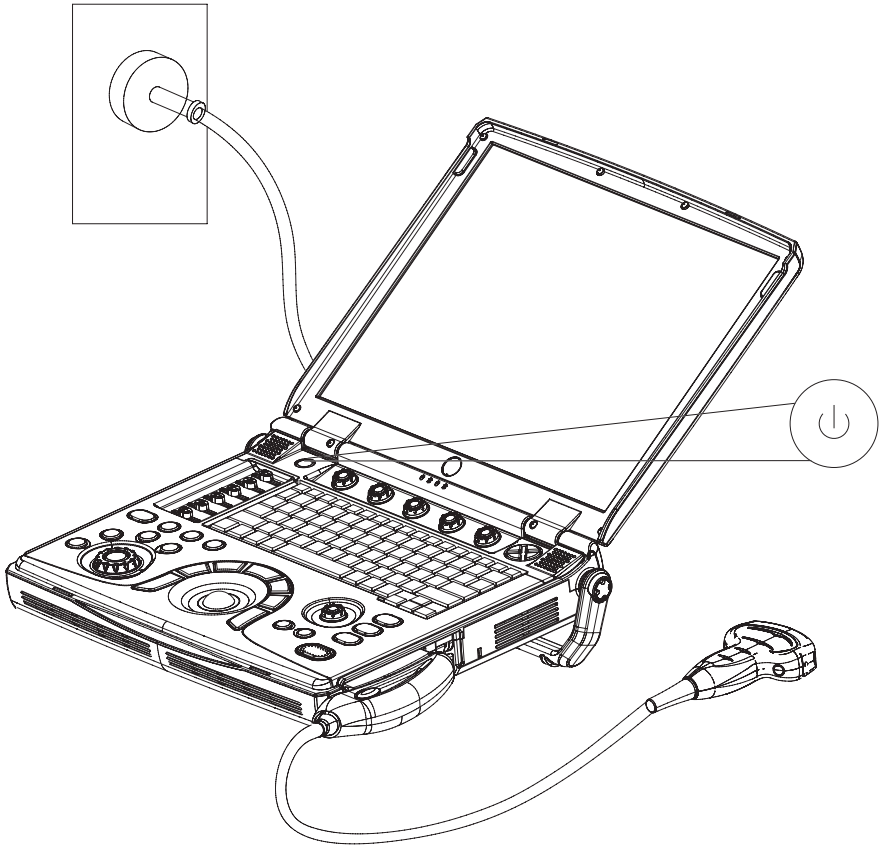

Figure 6. Step 7

Step 7, To turn on the system, press the power button.

LOGIQ e Control Panel Tour

1. TGC. Move slide pots left/right to adjust TGC.
2. New Patient. Press to activate these controls.
3. Additional Feature Keys: Steer, Harmonics, PDI.
4. Mode/Gain/Auto Keys: M Mode, Pulsed Wave Doppler (PW) Modes, Color Flow (CF) Mode and B Mode. Press these key to activate the mode; rotate the key to adjust the Gain; Press Auto to activate/deactivate auto optimization.
5. Imaging/Measurement Key: Cursor, Clear, Body Mark Measure, M/D Cursor, Scan Area, Set / B. Press these keys, as necessary.
6. Depth/Zoom/Ellipse. Adjust these keys, as necessary.
7. Start/Stop.
8. Print Keys: Press the ***P1, P2, P3*** keys to archive, print, or send the image.
9. Freeze. Press ***Freeze*** to freeze the image or return to scanning.
10. Keyboard. Use the keyboard to enter patient information and annotations. Press ***F1, F2, F3, F4, F5*** and ***F12*** keys to activate Online help/ User Manual, Arrow, Eject, Spooler, Reverse and Touch Panel Mode On/Off functions. The User can define functions for the ***F6-F11*** keys. The following functions are available for F7-F12 Keys: CWD, 3D, LOGIQ View, CrossXBeam, ECG On/Off, Set Home, Text Overlay, WorkSheet, Grab Last , Word Delete and Video.DVR. Press [**Utility**] to enter the Utility function and configure the system. Press [**Preset**] to preset the system. Press [**Report**] to Enter the report page.

LOGIQ e Keys

SoftMenu Key Tour

In general, there are two types of softMenu keys: Paddle Switch and adjustable knobs.

1. The Paddle Switch is used to access and adjust the Sub SoftMenu.
2. Press the adjustable knobs to toggle option menu between line one and line two.
3. Rotate the adjustable knobs to adjust the corresponding parameters.

Function Keys - Programmable Keys

- F1 = Help (Enter Online Help / User Manual)
- F2 = Arrow (Annotation Arrow)
- F3 = Eject (Eject media)
- F4 = Spooler (Activates DICOM Job Spooler screen)
- F5 = Reverse
- F6 -F11 Programmable
- F12 = Touch Panel Mode On/Off

How to Program your programmable keys

<Utility> - <Admin> - <Function Key>, <Key Configuration> then use the drop down menu.

Choices for program Keys

- CWD
- 3D
- LOGIQ View
- CrossXBeam
- ECG On/Off
- Set Home
- Text Overlay
- Grab Last
- Word Delete
- Video.DVR

Shortcut keys

- Ctrl + Alt + R: Restart the system
- Ctrl + E: Eject
- Ctrl + Alt + V: Output Video

How to Program your hot keys

<Utility> - <Admin> - <Function Key>, <Hot Key> then use the drop down menu.

Choices for hot keys

- No function
- Biopsy Guide
- Save as
- Active Image
- Measurement Select
- Auto Doppler Calculation
- Auto Trace
- DVD Format
- Range Focus
- OB Graph
- Measurement All Clear
- ATO
- Auto TGC
- Print4
- Print5

LOGIQ e Monitor Display Tour

1. Institution/Hospital Name, Date, Time, Operator Identification, system status (real-time of frozen).
2. Patient Name, Patient Identification.
3. Acoustic Output Readout.
4. GE Symbol: Probe Orientation Marker. Coincides with the probe orientation marking on the probe.
5. Image Preview.
6. Gray/Color Bar.
7. Cine Gauge.
8. Measurement Summary Window.
9. Image.
10. Measurement (not shown).
11. Results Window.
12. Probe Identifier. Exam Study.
13. Imaging Parameters by Mode (current mode highlighted).
14. Focal Zone.
15. TGC (not shown on the image).
16. Body Pattern.
17. Depth Scale.
18. Soft Menu.
19. Caps Lock: On or Off.
20. Start Menu Icon.
21. Battery icon.
22. Card icon.
23. Trackball Functionality Status: Scroll, M&A (Measurement and Analysis), Position, Size, Scan Area Width and Tilt.

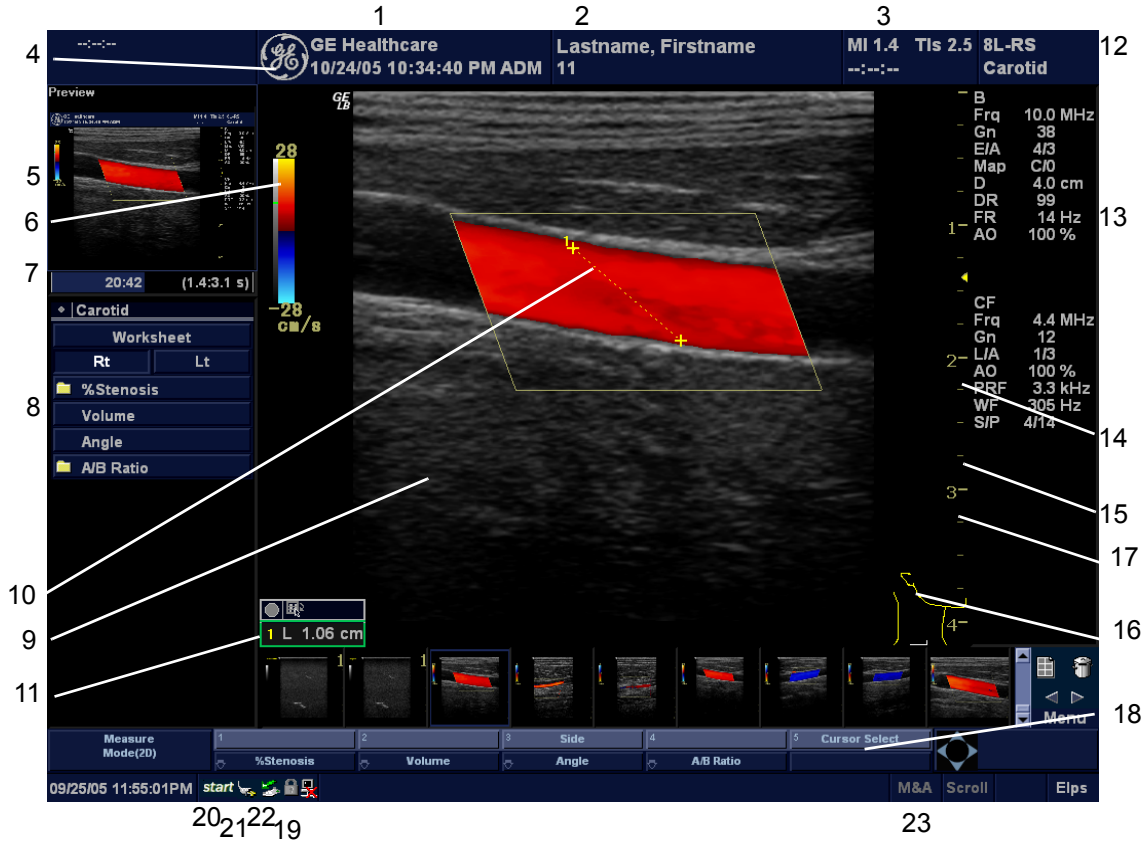

Control Panel Tour

System Power

Power On

To connect the system to the electrical supply:

1. Ensure that the wall outlet is of the appropriate type.
2. Ensure that the protective earth (ground) connection is reliable.

ACDC Type	Specification	ACDC Type	Specification
	220-240VAC 500VA (China)		220-240VAC 500VA (Switzerland)
	220-240VAC 500VA (India)		220-240VAC 500VA (U.K.)
	220-240VAC 500VA (Argentina)		100-120 VAC 500VA (USA)
	220-240 VAC 500VA (Europe)		220-240 VAC 500VA (Israel)
	100-120 VAC 500VA (Japan)		220-240 VAC 500VA (Australia)

Table 1: Example Plug and Outlet Configurations

3. Unwrap the power cable. Make sure to allow sufficient slack in the cable so that the plug is not pulled out of the wall if the system is moved slightly.

Use caution to ensure that the power cable does not disconnect during system use. If the system is accidentally unplugged, data may be lost.

Press the ***Power On/Off*** switch to turn the power on.

Figure 8. Power On/Off Switch Location

a. Power Switch Location

LEDs

Figure 9. LED indicators

1. Indicates hard disk working status. When the LED is flashing, the system is writing or reading from the hard disk. Color: Green.
2. Indicates power status. After pressing the ***Power On/Off*** switch, the system power is on and this LED is lit. Color: Green.
3. Indicates battery status. When the battery is charged, the LED is green. When battery power is low, the LED is orange. Colors: Green and orange.
4. The fourth LED does not work on LOGIQ e.

Power Off

To power down the system:

1. Press the ***Power On/Off*** switch at the front of the system once.
2. The System-Exit window is displayed.

3. Using the **Trackball** or Select key, select **Shutdown.**

   The shutdown process takes a few seconds and is complete when the power status LED (For LED status, refer to *Figure 9. on page 10*) is turned off.
4. Disconnect the probes.

   Clean or disinfect all probes as necessary. Store them in their shipping cases to avoid damage.
5. Close LCD cover.

Full Maintenance Reboot

You can select ***Full Maintenance Reboot*** to fully restart the system. It is used when installing new software or you feel the system response is getting slower.

1. Press the ***Power On/Off*** switch at the front of the system once. Using the ***Trackball*** and Select key, select **Full Maintenance Reboot**.
2. The reminder window is displayed.

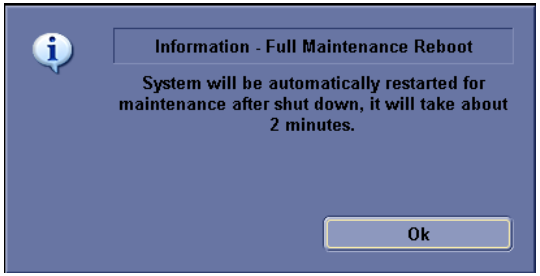

3. Click **OK** to continue the process. The full maintenance reboot process takes about 2 minutes and is completed when the application is restarted.

NOTE: For the purpose of performance improvement, system may require you to perform an auto full maintenance reboot even you are selecting Shutdown. The reminder window will be displayed:

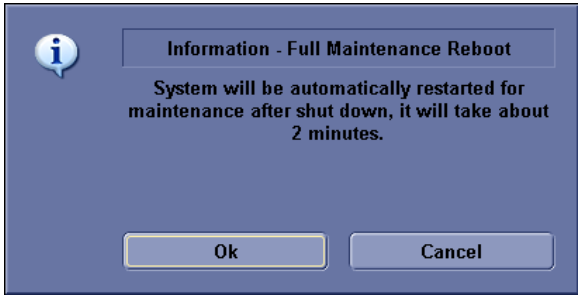

Click OK to continue the process. The auto full maintenance reboot process takes about 2 minutes, and is completed when the system is shut down automatically.

Starting an Exam

You need to select a pre-configured dataflow that sets up the ultrasound system to work according to the services associated to the dataflow.

1. Select your Operator Login and type in your Password:

2. Press OK.
3. Fill in the New Patient menu as described on page 12.

   OR,

If the patient name is on the patient record list, **Trackball** to the patient's name to highlight the name, (or perform a search to locate the patient).

Starting an Exam

New Patient

To start a new patient's exam,

1. Press ***Patient***. Press the New Patient button on the Patient menu.
2. Select the Exam Category.
3. Type the Patient ID, Patient Name, Birthdate, etc.
4. Press the Register button on the Patient menu (DO NOT press Register if you are automatically generating a patient ID).
5. Press **B**, ***Esc***, or ***Exit***.

Patient Entry Menu

Image Management Window [1]

Access to this patient's exam history and image management features.

Function Selection Window [2]

New Patient is used to clear the patient entry screen to input a new patient's data into the database. *Register* is used to enter new patient information into the database prior to the actual exam being performed. *Details* displays exam details and additional patient information.

EZBackup, EZMove [3]

One-step method to backup (move and delete patient images) to an external media.

Dataflow [4]

Selects this exam's dataflow preference.

Exit [5]

Exits the Patient Menu and returns to scanning.

Patient Information [6]

Patient ID, Name, Birthdate, Age and Sex.

Category Selection and Exam Information [7&8]

Select the appropriate category and enter the exam information.

Patient View and Exam View [9]

Patient View lists the patients in the database. "Search key" enables searching list by Patient ID, Last Name, First Name, Birthdate, Sex, Exam today, Exam between, Exam date before, Examdate, Examdate after, Accession Number and Exam Description. "string" field helps define the search parameters, and "Clear" clears the searching condition.

Exam View lists the exams of the selected patient. Select the patient or the exam in Patient View and press "Exam View".

B/M Mode Image Optimize

Power Output

Optimizes image quality and allows user to reduce beam intensity. 2% increments between 0-100%.

Dynamic Range

Dynamic Range controls how echo intensities are converted to shades of gray, thereby increasing the adjustable range of contrast.

Focus Number and Position

Increases the number of transmit focal zones or moves the focal zone(s) so that you can tighten up the beam for a specific area. A graphic caret corresponding to the focal zone position(s) appears on the right edge of the image.

NOTE: Push key to toggle between Focus Number and Focus Position.

NOTE: Not available when Auto frequency/Auto depth active.

Rejection

Selects a level below which echoes will not be amplified (an echo must have a certain minimum amplitude before it will be processed).

Edge Enhance

Edge Enhance brings out subtle tissue differences and boundaries by enhancing the gray scale differences corresponding to the edges of structures. Adjustments to M Mode's edge enhancement affects the M Mode only.

Frame Average

Temporal filter that averages frames together. This has the effect of presenting a smoother, softer image.

Colorize

Enables gray scale image colorization. To deactivate, reselect a Gray Map.

Gray Map

Determines how the echo intensity levels received are presented as shades of gray.

Rotation (Up/Down)

Rotates the image by selecting the value from the Softkey.

Frequency

Multi Frequency mode lets you downshift to the probe's next lower frequency or shift up to a higher frequency.

Line density

Optimizes B Mode frame rate or spatial resolution for the best possible image.

Sweep Speed

Changes the speed at which the time line is swept. The following speed values are available, 1, 2, 3, 4, 6, 8, 12, 16.

B Mode Control Panel Controls

Auto Optimize

Automatic Tissue Optimization optimizes the image based upon a specified Region of Interest (ROI) or anatomy within the display.

Zoom

Magnifies a zoom region of interest, which is magnified to approximately the size of a full-sized image. An un-zoomed reference image is displayed adjacent to the zoom window. The system adjusts all imaging parameters accordingly. Press **Depth/ Zoom/Ellipse** key to activate **Zoom**. Adjust the key to increase or decrease the zoom size. Use the **Trackball** to position the Zoom ROI. Only when the zoom size reaches the max or press the **Depth/ Zoom/Ellipse** key again would deactivate the Zoom, and activate Depth.

Reverse

Flips the image left/right.

Range Focus

Improves the near/mid field image quality, borders/ interfaces, increases contrast and detail resolution across the image, and allows for less filling in the vessels.

B/M Mode Image Optimize (continued)

B/M Mode Scanning Hints

Auto Optimize. Improves imaging performance while reducing optimization time.

Frequency. Changes system parameters to best optimize for a particular patient type.

Maps. There is an inter-dependency between gray maps, gain, and dynamic range. If you change a map, revisit gain and dynamic range settings.

Dynamic Range. Affects the amount of gray scale information displayed. If you increase the gain, you may want to decrease the dynamic range.

Edge Enhance. Better delineates the amount of border crispness.

Frame Average. Smooths the image by averaging frames. Affects the amount of speckle reduction.

CrossXBeam. Combines three or more frames from different steering angles into a single frame.

B-Mode Top/Sub Menu Controls

ED (Emergency Department)

Refer to Basic User Manual for more information.

B/M Mode
Image Optimize

Nerve Block

Refer to Basic User Manual for more information.

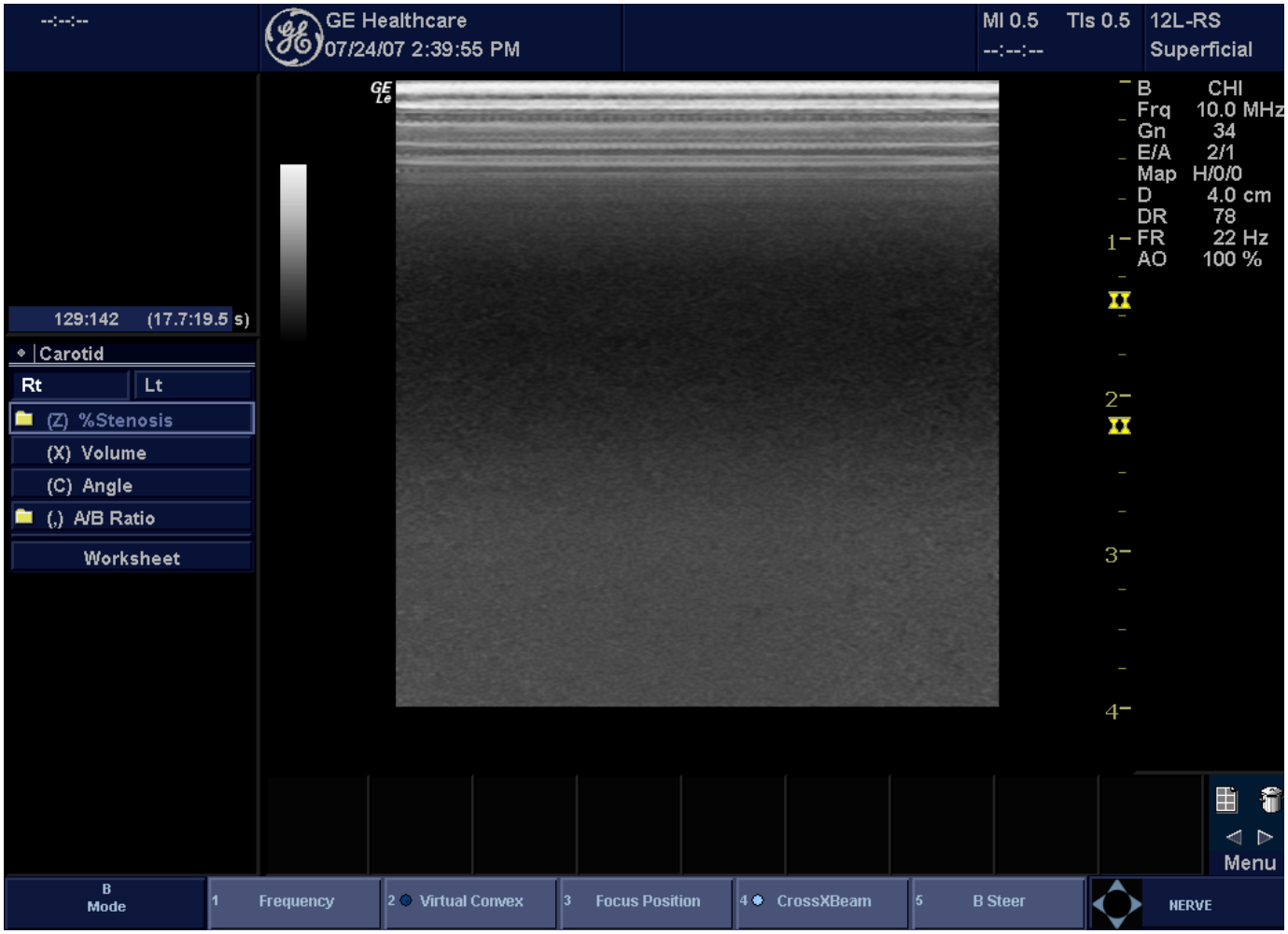

Color Flow/Doppler Image Optimize

Baseline

Adjusts the baseline to accommodate faster or slower blood flows to eliminate aliasing.

PRF/Wall Filter

Velocity scale determines pulse repetition frequency. If the sample volume gate range exceeds single gate PRF capability, the system automatically switches to high PRF mode. Multiple gates appear, and HPRF is indicated on the display.

Wall Filter insulates the Doppler signal from excessive noise caused from vessel movement.

NOTE: Push button to toggle between PRF and Wall Filter.

Angle Correct

Estimates the flow velocity in a direction at an angle to the Doppler vector by computing the angle between the Doppler vector and the flow to be measured.

Quick Angle

Quickly adjust the angle by 60 degrees.

Threshold

Threshold assigns the gray scale level at which color information stops.

Doppler Display Formats

Display layout can be preset to have B-Mode and Time-motion side-by-side or over-under.

Sample Volume Gate Length

Sizes the sample volume gate.

Map

Allows a specific color map to be selected. After a selection has been made, the color bar displays the resultant map.

Packet Size

Controls the number of samples gathered for a single color flow vector.

Controls in Common with B Mode

For more information on Focal Zone, Power Output, Frequency, Frame Average, Dynamic Range, Gray Map, and Colorize, refer to the B/M Mode Image Optimize section in this Quick Guide.

Scanning Hints

Line Density. Trades frame rate for sensitivity and spatial resolution. If the frame rate is too slow, reduce the size of the region of interest, select a different line density setting, or reduce the packet size.

Wall Filter. Affects low flow sensitivity versus motion artifact.

To improve sensitivity.

1. Increase the Gain.
2. Decrease the PRF.
3. Increase the Power Output.
4. Adjust the Line Density.
5. Decrease the Wall Filter.
6. Increase Frame Average.
7. Increase the Packet Size.
8. Reduce the ROI to the smallest reasonable size.
9. Position the Focal Zones properly.

To decrease motion artifact,

1. Increase the PRF.
2. Increase the Wall Filter.

To eliminate aliasing,

1. Increase the PRF.
2. Lower the Baseline.

For venous imaging,

1. Ensure that you have selected the vascular exam category.
2. Select a venous application.
3. Select the appropriate probe for very superficial structure.
4. Select two focal zones.
5. Adjust the depth to the anatomy to be imaged.
6. Maintain a low gain setting for gray scale.
7. Activate Color Flow.
8. Maintain the PRF at a lower setting.
9. Increase Frame Averaging for more persistence.

Color Flow/Doppler Image Optimize (continued)

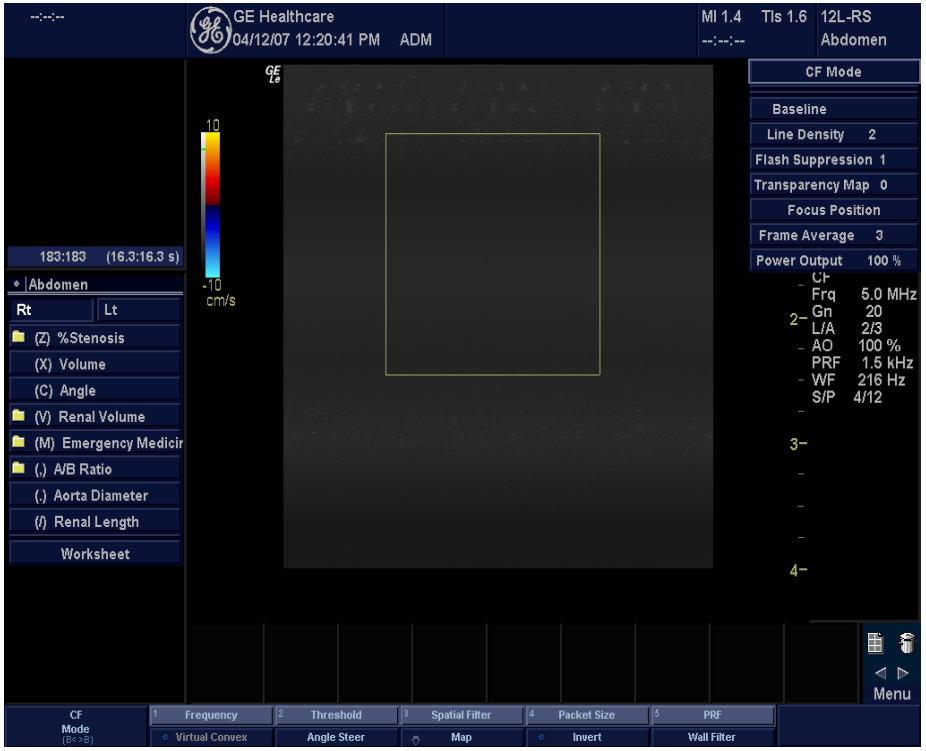

CFM Top/Sub Menu Controls

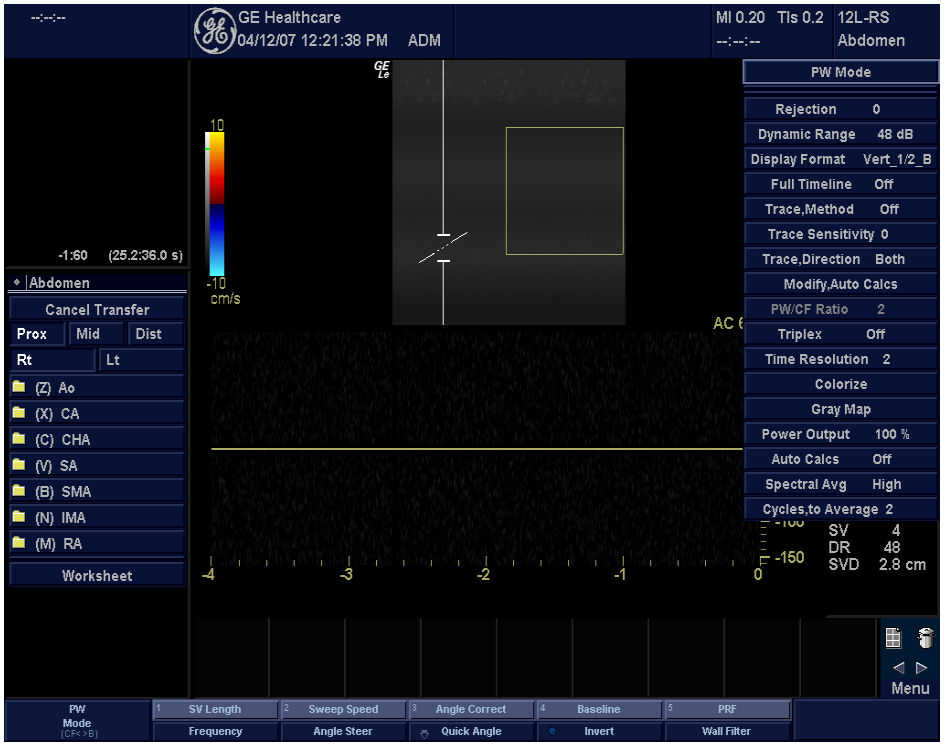

PWD Top/Sub Menu Controls

Basic Measurements

*NOTE: The following instructions assume that you first scan the patient and then press **Freeze**.*

B Mode

Distance and Tissue Depth Measurements

1. Press ***Measure*** once; an active caliper displays.
2. To position the active caliper at the start point (distance) or the most anterior point (tissue depth), move the ***Trackball***.
3. To fix the start point, press ***Set***. The system fixes the first caliper and displays a second active caliper.
4. To position the second active caliper at the end point (distance) or the most posterior point (tissue depth), move the ***Trackball***.
5. To complete the measurement, press ***Set***. The system displays the distance or tissue depth value in the measurement results window.

NOTE: Before you complete a measurement:

*To toggle between active calipers, press **Measure**.*

*To erase the second caliper and the current data measured and start the measurement again, press **Clear** once.*

*NOTE: After you complete the measurement, to erase all data that has been measured to this point, but not data entered onto worksheets, press **Clear**.*

Circumference/Area (Ellipse) Measurement

1. Press ***Measure*** once; an active caliper displays.
2. To position the active caliper, move the ***Trackball***.
3. To fix the start point, press ***Set***. The system fixes the first caliper and displays a second active caliper.
4. To position the second caliper, move the ***Trackball***.
5. Adjust the ***Ellipse*** control; an ellipse with an initial circle shape appears.
6. To position the ellipse and to size the measured axes (move the calipers), move the ***Trackball***.
7. To increase the size, adjust the ***Ellipse*** control in a clockwise direction. To decrease the size, adjust the ***Ellipse*** control in a counterclockwise direction.
8. To toggle between active calipers, press ***Measure***.
9. To complete the measurement, press ***Set***. The system displays the circumference and area in the measurement results window.

NOTE: Before you complete a measurement:

*To erase the ellipse and the current data measured, press **Clear** once. The original caliper is displayed to restart the measurement.*

*To exit the measurement function without completing the measurement, press **Clear** a second time.*

Circumference/Area (Trace) Measurement

1. Press ***Measure*** twice; a trace caliper displays.
2. To position the trace caliper at the start point, move the ***Trackball***.
3. To fix the trace start point, press ***Set***. The trace caliper changes to an active caliper.
4. To trace the measurement area, move the ***Trackball*** around the anatomy. A dotted line shows the traced area.

*NOTE: To erase the dotted line but not the trace caliper, press **Clear** once. To clear the trace caliper and the current data measured, press **Clear** twice.*

*NOTE: To erase the line (bit by bit) back from its current point, move the **Trackball** or adjust the **Ellipse** control.*

5. To complete the measurement, press ***Set***. The system displays the circumference and the area in the measurement results window.

NOTE: Before you complete a measurement:

To erase the line (bit by bit) back from its current point, move the Trackball or adjust the Ellipse control counterclockwise.

To erase the dotted line but not the trace caliper, press Clear once.

To clear the trace caliper and the current data measured, press Clear twice.

Volume

1. To make a volume calculation, do one of the following:

- Make one distance measurement.
- Make two distance measurements.
- Make three distance measurements.

  *NOTE: The three distance measurements should be done in the dual format mode (side by side images). One measurement is usually made in the sagittal plane and two measurements in the axial plane. To use the dual format mode, press the **L** or **R** key on front panel.*

- Make one distance and one ellipse measurement.
- Make one ellipse measurement.

2. Select ***Volume***.

M/PWD

Time Interval Measurement

1. Press ***Measure*** twice; an active caliper with a vertical dotted line displays.
2. To position the active caliper at the start point, move the ***Trackball***.
3. To fix the start point, press ***Set***. The system fixes the first caliper and displays a second active caliper.
4. To position the second caliper at the end point, move the ***Trackball***.
5. To complete the measurement, press ***Set***. The system displays the time interval between the two calipers in the measurement results window.

Velocity Measurement

1. Press ***Measure***; an active caliper with a vertical dotted line displays.
2. To position the caliper at the desired measurement point, move the ***Trackball***.
3. To complete the measurement, press ***Set***. The system displays the velocity measurement in the measurement results window.

PI, RI, S/D Ratio, D/S Ratio or A/B Ratio

Select **PI**, **RI**, **S/D Ratio**, **A/B Ratio** or **D/S Ratio** from the Doppler Primary and secondary menu. Perform velocity measurements.

1. The first caliper is the start point on the Doppler waveform. This would be V_{MAX} for PI, peak velocity for RI, systole for S/D ratio, "A" velocity for A/B ratio or diastole for D/S ratio.
2. The second caliper is the end-point caliper to the end point of the Doppler waveform. This would be V_d for PI, minimum velocity for RI, diastole for S/D ratio, "B" velocity for A/B ratio or systole for D/S ratio.

NOTE: For the PI calculation, if Auto Trace is not selected, manually trace the waveform between V_{MAX} and V_d.

NOTE: For the PI calculation, if Auto Trace is on, the system automatically traces the waveform when Set is pressed to fix V_d.

Worksheets

Measurement/Calculation worksheets are available to display and edit measurements and calculations. There are generic worksheets as well as Application specific worksheets. The worksheets are selected from the Measurement menu or by pressing the function key defined on keyboard.

Using Probes

Connecting a probe

1. Place the probe's carrying case on a stable surface and open the case.
2. Carefully remove the probe and unwrap the probe cable.
3. DO NOT allow the probe head to hang free. Impact to the probe head could result in irreparable damage.
   Inspect the probe before and after each use for damage or degradation to the housing, strain relief, lens, seal and connector. DO NOT use a transducer which appears damaged until functional and safe performance is verified. A thorough inspection should be conducted during the cleaning process.
4. Align the connector with the probe port and carefully push into place with the cable facing the front of the system.
5. Turn the connector locking lever up.
6. Carefully position the probe cord so it is free to move, but not resting on the floor.

Activating the probe

The probe activates automatically in the currently-selected operating mode when it is connected. The probe's default settings for the mode and selected exam are used automatically.

Deactivating the probe

When deactivating the probe, the probe is automatically placed in standby mode.

1. Ensure the LOGIQ e is in freeze mode. If necessary, press the ***Freeze*** key.
2. Gently wipe the excess gel from the face of the probe.
3. Carefully slide the probe around the right side of the keyboard, toward the probe holder. Ensure that the probe is placed gently in the probe holder.

Disconnecting the probe

Probes can be disconnected at any time. However, the probe should not be active when disconnecting the probe.

1. Press the connector locking lever down.
2. Pull the probe and connector straight out of the probe port.
3. Carefully slide the probe and connector away from the probe port and around the right side of the keyboard.
4. Ensure the cable is free.
5. Be sure that the probe head is clean before placing the probe in its storage box or a wall hanging unit.

CAUTION

Fault conditions can result in electric shock hazard. Do not touch the surface of probe connectors which are exposed when the probe is removed. Do not touch the patient when connecting or disconnecting a probe.

Probe Application

Table 1: LOGIQ e Probe Indications for Use

Probe Application	4C-RS	E8C-RS	8L-RS	8C-RS	i12L-RS	3S-RS	12L-RS	9L-RS	16L-RS	I739-RS/ T739-RS
Abdomen	X			O		O				
Small Parts			X		O		X	X	X	O
Obstetrics	X	X								
Gynecology	X	X								
Pediatrics	X		O	X		O	O	O	O	
Neonatal			O	X			O	O	O	
Urology	X	O								
Cardiac						X				
Endocavity		X								
Transcranial				O		X				
Intraoperative			O	O	X		O	O	O	X
Vascular	O		X	O	X		X	X	X	O
Biopsy	O	O	O			O	O	O	O	
X Main Application O Accessory Application										

Probe Features

Table 2: LOGIQ e Probe Features

Probe Feature	4C-RS	E8C-RS	8L-RS	8C-RS	i12L-RS	3S-RS	12L-RS	9L-RS	16L-RS	I739-RS/ T739-RS
LOGIQ View	X	X	X	X	X	X	X	X	X	X
Virtual Convex			X		X		X	X	X	X
Virtual Apex						X				
Easy 3D	X	X	X	X	X	X	X	X	X	X
M Color Flow	X	X	X	X	X	X	X	X	X	X
Tru Access	X	X	X	X	X	X	X	X	X	X
Non-Imaging CW						X				
CrossXBeam	X	X	X	X	X		X	X	X	X
ACO	X	X	X	X	X	X	X	X	X	X
B Steer+			X		X		X	X	X	X
Auto TGC	X	X	X	X	X	X	X	X	X	X

Specification

Table 5: System Probe Definitions (LOGIQ e)

Probe Designation	Center Image Frequency (MHz)	Doppler Frequency (MHz)	
		Normal	Penetration
4C-RS	3.2 ± 10%	3.3	2.5
E8C-RS	6.5 ± 20%	5.0	4.0
8L-RS	6.2 ± 20%	4.4	4.0
8C-RS	6.3 ± 20%	5.0	4.0
i12L-RS	5.8 ± 10%	4.4	4.0
3S-RS	2.0 ± 20%	2.2	1.7
12L-RS	7.5 ± 20%	4.4	4.0
9L-RS	5.2 ± 20%	5.0	3.3
16L-RS	12.0 ± 20%	10.0	8.0
I739-RS/T739-RS	6.4 ± 20%	5.0	4.0

Probe Cleaning and Disinfection Instructions

Probe Safety

WARNING

Ultrasound probes are highly sensitive medical instruments that can easily be damaged by improper handling. Use care when handling and protect from damage when not in use. DO NOT use a damaged or defective probe. Failure to follow these precautions can result in serious injury and equipment damage.

Ultrasound transducers can easily be damaged by improper handling and by contact with certain chemicals. Failure to follow these precautions can result in serious injury and equipment damage.

- Do not immerse the probe into any liquid beyond the level specified for that probe. Never immerse the transducer connector or probe adapters into any liquid.
- Avoid mechanical shock or impact to the transducer and do not apply excessive bending or pulling force to the cable.
- Transducer damage can result from contact with inappropriate coupling or cleaning agents:
  - Do not soak or saturate transducers with solutions containing alcohol, bleach, ammonium chloride compounds or hydrogen peroxide
  - Avoid contact with solutions or coupling gels containing mineral oil or lanolin
  - Avoid temperatures above 60°C.
  - Inspect the probe prior to use for damage or degeneration to the housing, strain relief, lens and seal. Do not use a damaged or defective probe.

CAUTION

Adequate cleaning and disinfection are necessary to prevent disease transmission. It is the responsibility of the equipment user to verify and maintain the effectiveness of the infection control procedures in use. Always use sterile, legally marketed probe sheaths for intra-cavitary and intra-operative procedures.

For neurological intra-operative procedures, use of a legally marketed, sterile, pyrogen free probe sheath is REQUIRED. Probes for neuro surgical use must not be sterilized with liquid chemical sterilants because of the possibility of neuro toxic residues remaining on the probe.

Biological Hazard

A defective probe or excessive force can cause patient injury or probe damage:

- Observe depth markings and do not apply excessive force when inserting or manipulating intercavity probes.
- Inspect probes for sharp edges or rough surfaces that could injure sensitive tissue.
- **DO NOT** apply excessive force to the probe connector when inserting into the probe port. The pin of a probe connector may bend.

In order for liquid chemical germicides to be effective, all visible residue must be removed during the cleaning process. Thoroughly clean the probe, as described on the following page before attempting disinfection.

CREUTZFIELD-JACOB DISEASE
Neurological use on patients with this disease must be avoided. If a probe becomes contaminated, there is no adequate disinfecting means.

Electrical Hazard

The probe is driven with electrical energy that can injure the patient or user if live internal parts are contacted by conductive solution:

- **DO NOT** immerse the probe into any liquid beyond the level indicated by the immersion level diagram. Never immerse the probe connector or probe adaptors into any liquid.
- **DO NOT** drop the probes or subject them to other types of mechanical shock or impact. Degraded performance or damage such as cracks or chips in the housing may result.
- Inspect the probe before and after each use for damage or degradation to the housing, strain relief, lens, and seal. A thorough inspection should be conducted during the cleaning process.
- **DO NOT** kink, tightly coil, or apply excessive force on the probe cable. Insulation failure may result.
- Electrical leakage checks should be performed on a routine basis by GE Service or qualified hospital personnel. Refer to the service manual for leakage check procedures.

Probe Cleaning, After Each Use

1. Disconnect probe from ultrasound console and remove all coupling gel from probe by wiping with a soft cloth and rinsing with flowing water.
2. Wash the probe with mild soap in lukewarm water. Scrub the probe as needed using a soft sponge, gauze, or cloth to remove all visible residue from the probe surface. Prolonged soaking or scrubbing with a soft bristle brush (such as a toothbrush) may be necessary if material has dried onto the probe surface.
3. Rinse the probe with enough clean potable water to remove all visible soap residue.
4. Air dry or dry with a soft cloth.

Probe Disinfection, After Each Use

1. Prepare the germicide solution according to the manufacturer's instructions. Be sure to follow all precautions for storage, use and disposal.
2. Place the cleaned and dried probe in contact with the germicide for the time specified by the germicide manufacturer. High-level disinfection is recommended for surface probes and is required for endocavitary and intraoperative probes (follow the germicide manufacturer's recommended time).

   Probes for neuro surgical intra-operative use must **NOT** be sterilized with liquid chemical sterilants because of the possibility of neuro toxic residues remaining on the probe. Neurological procedures must be done with the use of legally marketed, sterile, pyrogen free probe sheaths.
3. After removing from the germicide, rinse the probe following the germicide manufacturer's rinsing instructions. Flush all visible germicide residue from the probe and allow to air dry.

Probe Immersion Levels

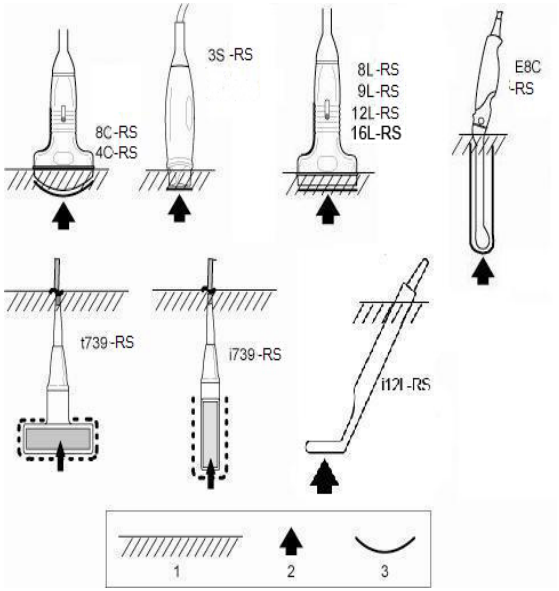

1. Fluid Level
2. Aperture
3. Contact face within patient environment

CAUTION

In order for liquid chemical germicides to be effective, all visible residue must be removed during the cleaning process. Thoroughly clean the probe, as described earlier before attempting disinfection.

*You **MUST** disconnect the probe from the LOGIQ e prior to cleaning/ disinfecting the probe. Failure to do so could damage the system.*

Probe Disinfection Agents

Ultrasound probes can be disinfected using liquid chemical germicides. The level of disinfection is directly related to the duration of contact with the germicide. Increased contact time produces a higher level of disinfection.

Review the probe care card that is packed with each probe. The following website contains the most current and up-to-date recommendations:

http://www.gehealthcare.com/usen/ultrasound/products/probe_case.html

Cidex Plus has been approved for the all probes available on LOGIQ e.

Pera Safe high level disinfectant has been approved for the 8C-RS and 12L-RS probes.

T-Spray low level disinfectant has been approved for the 8C-RS,12L-RS, 3S-RS and 8L-RS probes. T-Spray II has been approved for all the probes available on LOGIQ e.

Image Management

Clipboard

As images are saved by pressing any of the print keys (P1, P2, or P3), the images appear at the bottom of the display on the clipboard as thumbnails of the images saved during the exam. These images remain on the clipboard until the end of the exam.

Printing Images

Press the appropriate print key (P1, P2, P3).

Browsing an Exam's Stored Images

From the New Patient menu, open Image History. View the thumbnail images for the past exam or group images.

Managing an Exam's Stored Images

From the New Patient menu, open Active Images. View active exam images.

Deleting an Image

Select the image on the clipboard, then press the onscreen Delete shortcut or From the New Patient menu, select the image from the Review Screen of Image Management, then press Delete.

Save Image to USB Memory Stick

The brand we validated is:

1. Kingston 512MB USB

To use them the user needs to do the following:

- Insert them into a free USB port.
- Click on the **Menu** option from the right side of the screen.
- Click **Save As**.
- Select the **Removable disk** drive.
- Select File Type (DICOM, JPG or AVI).
- Provide File-Name and press **Save**.

Before pulling out the memory stick, the device should be stopped, by clicking on the **Eject-Hardware** Icon (see following figure), selecting the device, and pressing **Stop.**

Connectivity

Connectivity on the LOGIQ e is based on the Dataflow concept.

Dataflow Concept

A dataflow is a set of pre-configured services. For example, DICOM services may be for storage, worklist, verify, etc. In addition, there are other service types like video print, standard color print, storage to local hard drive, select patient from local database, etc.

Starting an Exam

You need to select a pre-configured dataflow that sets up the ultrasound system to work according to the services associated to the dataflow.

1. Select your Operator Login and type in your Password:

2. Press Log on.
3. Fill in the New Patient menu as previously described,

   OR,

If the patient name is on the patient record list,

Trackball to the patient's name to highlight the name, (or perform a search to locate the patient) then press **Select Patient**.

Configuring Connectivity

Login as Administrator. Press the right Utility tab. Select the Connectivity tab. Configure the menus from left to right, starting with TCP/IP first.

TCP/IP

Type in the Computer's Name (better known as the AE Title). Identify the Ultrasound system to the rest of the network by filling in its IP Address, Subnet Mask, and Gateway (if applicable). Select the **network speed** (Auto Detect, 10Mbps/Half/Full Duplex, or 100Mbps/Half/Full Duplex). Press **Save**.

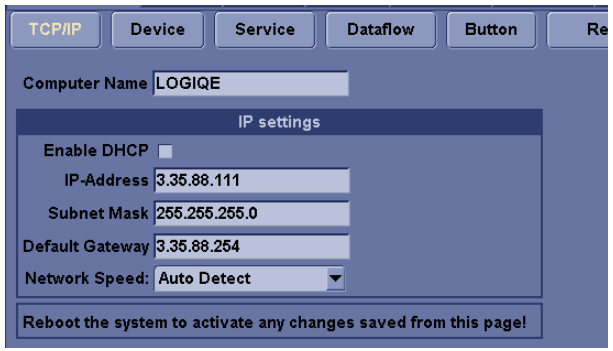

Device

1. Press Add to create a new device.
2. Enter device name and IP address of serve.

Ping a Device:

- Select the device, press ping button

Services (better known as Destinations)

1. Select the Server from the pull-down menu.
2. Press Add.
3. Select all the services for this device from the pull-down menu to the right.
4. Press Add.
5. At the bottom of the menu, fill in the appropriate criteria for this service. Repeat this step for each selected service for this device.

For example:

a. In the Services drop-down menu, select "Dicom Image Storage" and press [Add]. For AE Title enter "Jdicom_Server" and for port number enter 5104.

b. Change its name to "Jdicom Image Storage". Enter AE title and port number.

c. In the Services drop-down menu, select "Dicom Storage Commitment" and press [Add]. Change its name to "Jdicom Store Commit". For AE Title enter "Jdicom_Server" and for port number enter 5104.

d. In the Services drop-down menu, select "Dicom Worklist" and press [Add]. Change its name to "Jdicom Worklist". For AE Title enter "Jdicom_Worklist" and for port number enter 6104

Services (cont'd)

e. In the Services drop-down menu, select "Dicom Performed Procedure" and press [Add]. Change its name to "Jdicom Perf Pro". For AE Title enter "Jdicom_Worklist" and for port number enter 6104.

f. In the Services drop-down menu, select "Dicom Print" and press [Add]. Change its name to "Jdicom Print". For AE title enter "Jdicom_Printer" and for port number enter 7104.

Verify a Service (Jdicom Image Storage)

Select the service, press verify button

Buttons

You can assign print buttons (P1-P3) to a device or to a dataflow.

1. Select "Dicom Image Storage", add to Printflow view.
2. Delete other printflow. Save the change

NOTE: You can configure each print key to multiple output devices/workflows.

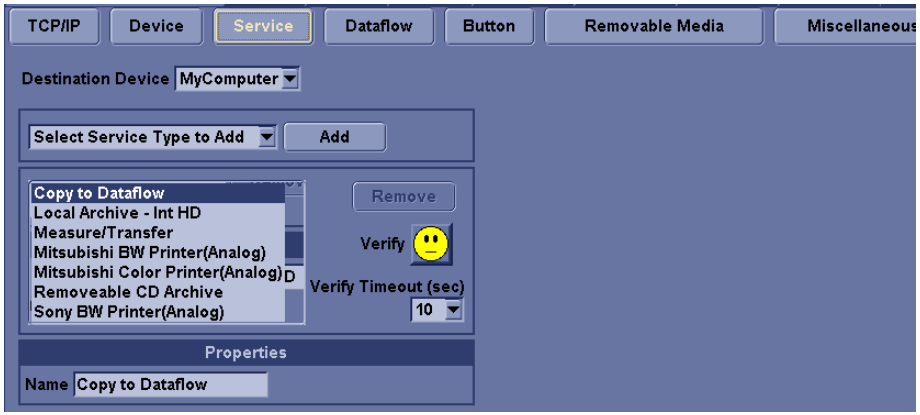

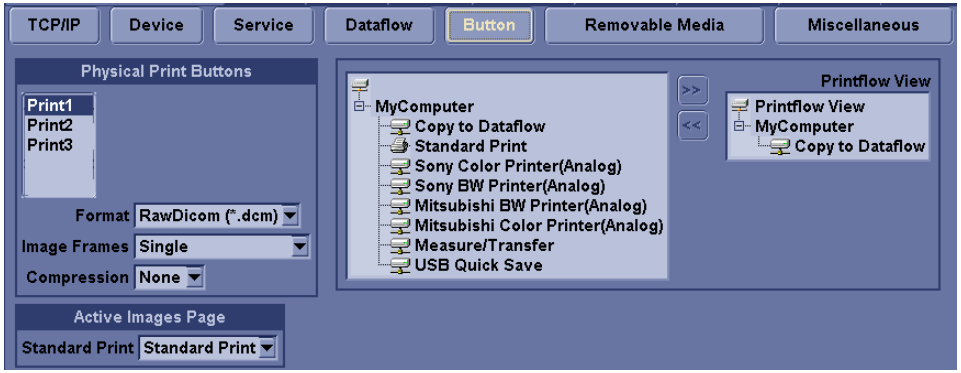

Dataflow

Creates a Dataflow, (‘WL-LA-DServ -- Worklist, Local Archive, DICOM* Server, for example).

1. Name the Dataflow (select from pull-down menu or add a new dataflow).
2. Configure the flow in the Dataflow section of the screen. Select the service from the pull-down menu and press Add.

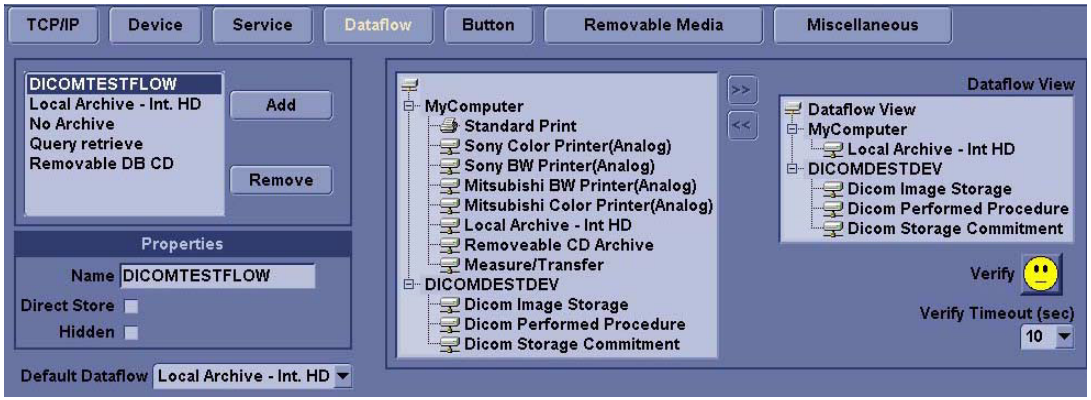

DICOM Status

To check the status of all DICOM jobs or redirect DICOM jobs, press ***F4*** to open the spooler.

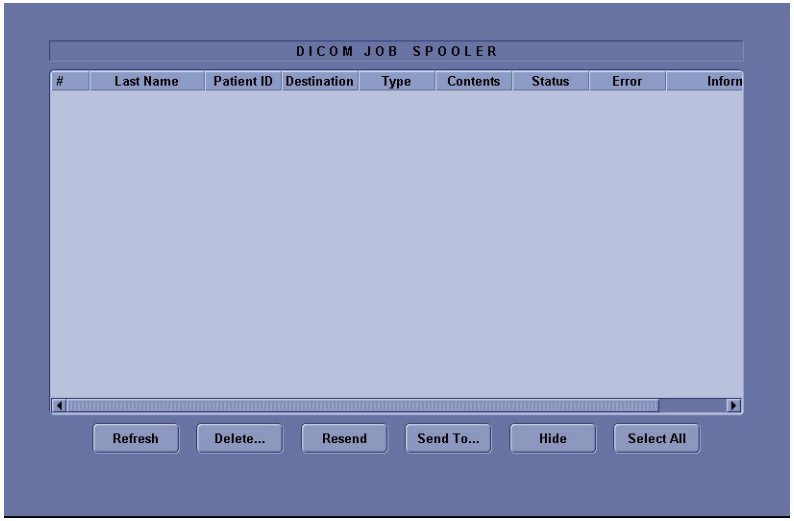

Using CINE

Activating CINE

Press **Freeze**, then roll the **Trackball** to activate CINE. To start CINE Loop playback, press **Run/Stop** Softkey on the primary menu. To stop CINE Loop playback. press **Frame by Frame(Run/Stop)** Softkey on primary menu.

Quickly Move to Start/End Frame

Press ***First*** to move to the first CINE frame; press ***Last*** to move to the last CINE frame.

Start Frame/End Frame

Press the ***Start Frame*** Softkey to move to the beginning of the CINE Loop. Adjust the ***Start Frame*** Softkey rightward to move forward through the CINE Loop. Adjust the Softkey leftward to move backward through the CINE Loop.

Press the ***End Frame*** Softkey to move to the end of the CINE Loop. Adjust the ***End Frame*** Softkey rightward to move forward through the CINE Loop. Adjust the Softkey leftward to move backward through the CINE Loop.

Adjusting the CINE Loop Playback Speed

Adjust the ***Loop Speed*** Softkey to increase/decrease the CINE Loop playback speed.

Moving through a CINE Loop Frame By Frame

Adjust the ***Frame by Frame*** Softkey to move through CINE memory one frame at a time.

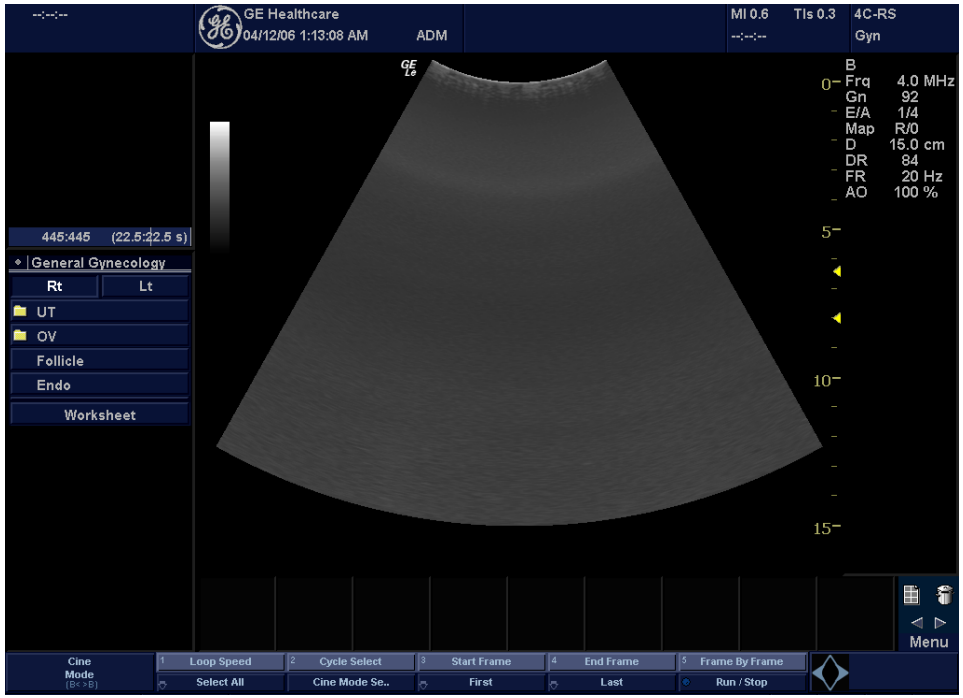

Easy 3D

Acquiring a 3D Scan

1. Optimize the B-Mode image. Ensure even gel coverage.
2. Press the **3D** control panel key. Two screens appear.
3. To start acquiring the image, press '**L**' (the left split screen key).
4. To perform a parallel scan, scan evenly. To perform a sweep (fan) scan, rock the probe once. Note the distance of the scan.
5. The 3D volume of interest is dynamically assembled on the left side of the screen.

NOTE: If the image stops before you're done scanning, start acquiring the 3D volume of interest again.

6. To complete the 3D scan, press '**R**' (the right split screen key).

Manipulating the 3D Scan

Imagine you are able to manipulate the 3D volume of interest (VOI) in your hand.

You can rotate it left to right or right to left. You can rotate it forward/backward (white hand).

Then, imagine that you can view the volume of interest one slice at a time through the anatomy (red hand).

Also imagine that you are able to pull back tissue to view specific portions of anatomy (yellow and green hands).

The 3D volume of interest is a tangible anatomical object that you can see and manipulate easily using the **Trackball** and **Set** control panel keys.

Practice positioning the pointer at different places within the 3D volume of interest. Highlight different colors, press **Set** to select this volume for manipulation. Use the hand to move the 3D volume.

Adjusting the 3D Volume of Interest

You can colorize the 3D volume of interest.

You can resize the VOI by adjusting the scan distance.

Performing a Surface Render

From the 3D Touch Panel, press ***3D***, then press ***Texture*** on the left menu to add a photorealistic/ clay-like quality to the render.

Adjust the opacity and density via ***Threshold/ Opacity*** (press the key to adjust opacity). This adjusts which 'grays' the system recognizes, allowing you to emphasize/de-emphasize grays as necessary.

Scalpel

To scalpel away portions of the anatomy,

1. Press ***Scalpel***. A caliper appears on the 3D VOI.
2. Press **Set** to set the caliper. **Trackball** around the portion to be cut away.
3. Double click and apply the scalpel.
4. Change the projection and scalpel again.

NOTE: You can undo one scalpel movement (the last one).

3DView Scanning Hints

Set the appropriate values for the 3D Acq Mode and Scan Plane.

It is advisable to set the scan distance before the scan begins.

Global Service User Interface

How to enter the global service interface

1. Press the Utility tab, select Service tab in Utility window, netscape will show GEMS Service Home Page. Select ‘Operator’ in option of User Level, enter correct password ‘uls’, then press Okay.

2. Now user can enter Global Service User interface. Choose Diagnostics, and then we enter LOGIQ e Diagnostics menu.

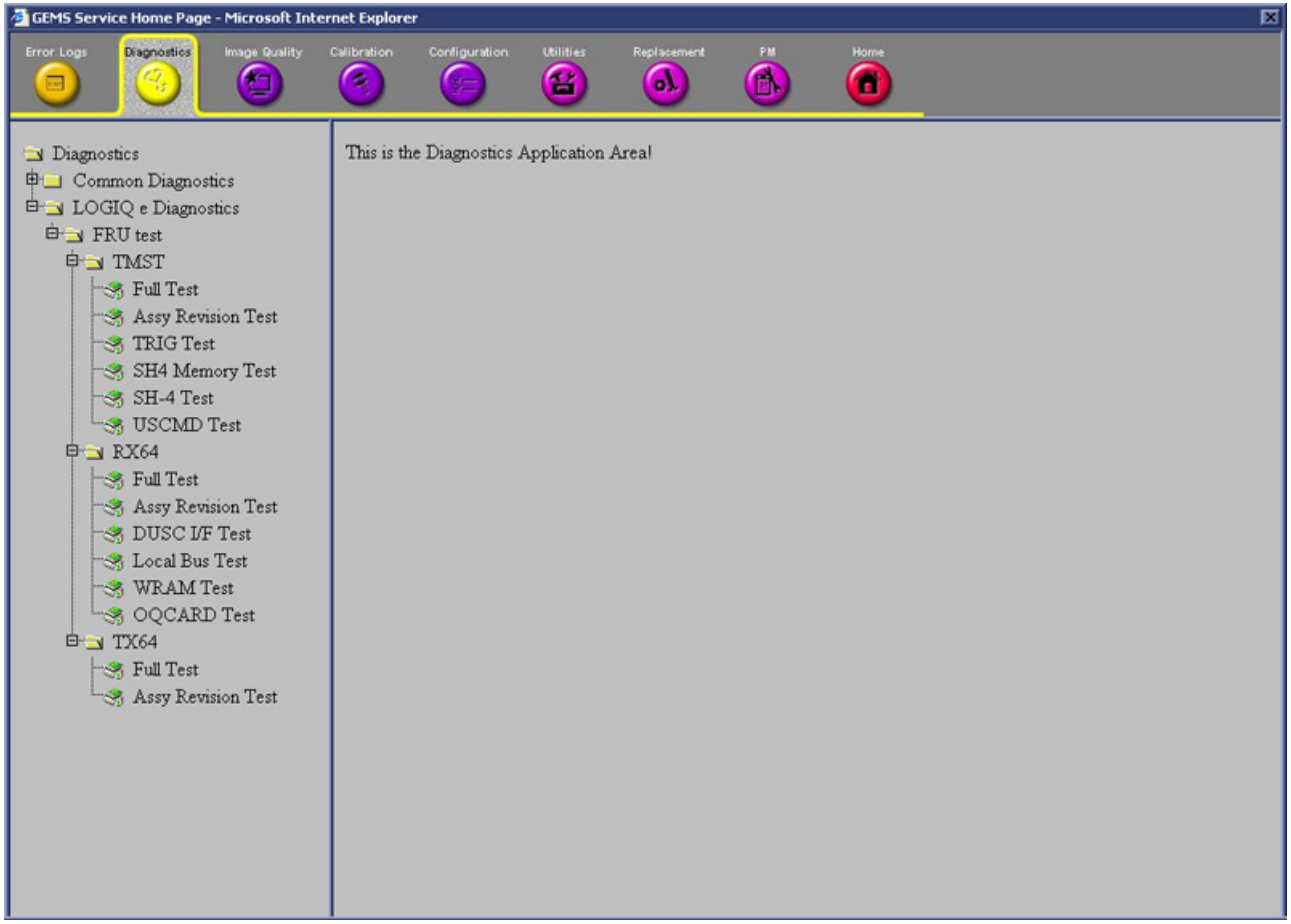

Using Touch Screen

Activate/Deactivate Touch Panel Mode by pressing F12.

NOTE: All the keys except F12, Set/B Pause, Cursor, Power key and keyboard of LOGIQ e will be disabled if Touch Screen is activated.

NOTE: Pressing power key will deactivate Touch Screen Mode automatically.

NOTE: Always use fingers or gloved fingers to operate on the Touch Screen, improper use may cause damage to the monitor.

NOTE: It is recommended to close the LCD of LOGIQ e after switching to Touch Screen to avoid keyboard contamination of blood, chemicals, etc

NOTE:

Touch Screen Display Tour

1. **Patient**, click to go into register patient.
2. **Preset**, click to go into Preset Screen.
3. **Comment**, click to add comments.
4. **Measure**, clcik to start 2D measurement.
5. **End Exam**, click to end current exam.
6. **B Pause**, click to toggle between real time B-Mode with Doppler Mode (with audio)
7. **Clear All**, click to clear all the annotations ane measurements
8. **Mode Panel Bar**, click to select mode.
9. **Top Menu**, varies as mode changes.
10. **Freeze**
11. **Store**, the same function as P1
12. **Power Output**
13. **Focus Position** Comtrol
14. **Depth** Control
15. **Frequency** Control
16. **Gain** Control, click fast forward to increase or fast backward to decrease gain by larger steps.
17. **Scroll Button** Click to toggle between clipboard galleries

BarCode Reader Configuration

Patient information can be input before each exam by scanning barcode with the BarCode Reader.

There are three InputModes of BarCocde: NOBARCODE, PATIENTID and COMPLEXATION. It can be configured in <Utility> - <BarCode> page.

BarCode Reader

Select BarCode Reader in drop-down menu.

NOTE: Reboot is required after the device is selected or changed.

InputModes

Not Connected

Enter Patient ID using keyboard.

Patient ID

Scan BarCode as the Patient ID.

When it is selected, a dialogue box appears when pressing **New Patient**. It disppears automatically after scanning the barcode successfully, you can click Cancel to enter Patient ID by keyboard.

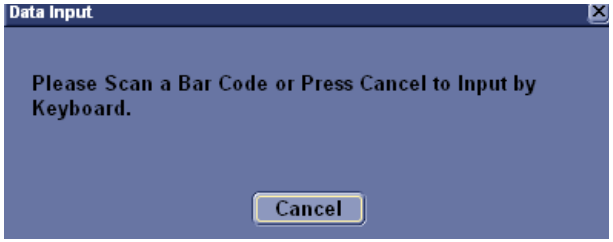

Complexation

NOTE: Complexation Mode is not supported by BarCode Reader Handheld 3800G.

Scan BarCode to input Patient Information.

When it is selected, a dialogue box appears when pressing **New Patient**. It disppears automatically after scanning the barcode successfully, you can click Cancel to enter Patient ID by keyboard.

1. Enter a string in InputData field by scanning from a barcode or typing by keyboard
2. Scan a sample barcode, the following items can be included in the barcode:
   a. Patient ID
   b. Last Name, First Name, Middle Name,
   c. BIrthYear, BirthMonth, BirthDay

   NOTE: The length of BirthYear equals to 4, BirthMonth equals to 2 and BirthDay equals to 2, and they should always be provided together.

   d. Gender.
3. Configure the Start and End position for each item.

   NOTE: If the BarCode does not contain the information, configure the Start and End position as "0"

For example, if the scanned data is "000001LastNameFirstNameMiddleName19900101F", the configuration and result displays as the following:

Precaution Levels

Icon description

Various levels of safety precautions may be found on the equipment and different levels of concern are identified by one of the following flag words and icons which precede the precautionary statement.

DANGER — Indicates that a specific hazard is known to exist which through inappropriate conditions or actions will cause:

- Severe or fatal personal injury
- Substantial property damage.

WARNING — Indicates that a specific hazard is known to exist which through inappropriate conditions or actions may cause:

- Severe personal injury
- Substantial property damage.

CAUTION — Indicates that a potential hazard may exist which through inappropriate conditions or actions will or can cause:

- Minor injury
- Property damage.

NOTE: Indicates precautions or recommendations that should be used in the operation of the ultrasound system, specifically:

- Maintaining an optimum system environment
- Using this Manual
- Notes to emphasize or clarify a point.

Hazard Symbols - Icon Description

Potential hazards are indicated by the following icons:

Table 5: Potential Hazards

Icon	Potential Hazard	Usage	Source
Biological Hazard	• Patient/user infection due to contaminated equipment.	• Cleaning and care instructions • Sheath and glove guidelines	ISO 7000 No. 0659
Electrical Hazard	• Electrical micro-shock to patient, e.g., ventricular	• Probes • ECG, if applicable • Connections to back panel	
Acoustic Output Hazard	• Patient injury or tissue damage from ultrasound radiation.	• ALARA, the use of power output following the as low as reasonably achievable principle	
Explosion Hazard	• Risk of explosion if used in the presence of flammable anesthetics.	• Flammable anesthetic	
Smoke & Fire Hazard	• Patient/user injury or adverse reaction from fire or smoke. • Patient/use injury from explosion and fire.	• Outlet guidelines	

Important Safety Considerations

The following topic headings (Patient Safety, and Equipment and Personnel Safety) are intended to make the equipment user aware of particular hazards associated with the use of this equipment and the extent to which injury can occur if precautions are not observed. Additional precautions may be provided throughout the manual.

CAUTION Improper use can result in serious injury. The user must be thoroughly familiar with the instructions and potential hazards involving ultrasound examination before attempting to use the device. Training assistance is available from GE Medical Systems if needed.

The equipment user is obligated to be familiar with these concerns and avoid conditions that could result in injury.

Patient Safety

Related Hazards

WARNING The concerns listed can seriously affect the safety of patients undergoing a diagnostic ultrasound examination.

Patient identification

Always include proper identification with all patient data and verify the accuracy of the patient's name or ID numbers when entering such data. Make sure correct patient ID is provided on all recorded data and hard copy prints. Identification errors could result in an incorrect diagnosis.

Diagnostic information

Equipment malfunction or incorrect settings can result in measurement errors or failure to detect details within the image. The equipment user must become thoroughly familiar with the equipment operation in order to optimize its performance and recognize possible malfunctions. Applications training is available through the local GE representative. Added confidence in the equipment operation can be gained by establishing a quality assurance program.

Related Hazards (continued)

Mechanical hazards

The use of damaged probes or improper use and manipulation of intracavity probes can result in injury or increased risk of infection. Inspect probes often for sharp, pointed, or rough surface damage that could cause injury or tear protective barriers. Never use excessive force when manipulating intracavity probes. Become familiar with all instructions and precautions provided with special purpose probes.

Electrical Hazard

A damaged probe can also increase the risk of electric shock if conductive solutions come in contact with internal live parts. Inspect probes often for cracks or openings in the housing and holes in and around the acoustic lens or other damage that could allow liquid entry. Become familiar with the probe's use and care precautions outlined in *Probes and Biopsy*.

CAUTION

Ultrasound transducers are sensitive instruments which can easily be damaged by rough handling. Take extra care not to drop transducers and avoid contact with sharp or abrasive surfaces. A damaged housing, lens or cable can result in patient injury or serious impairment or operation.

CAUTION

Ultrasound can produce harmful effects in tissue and potentially result in patient injury. Always minimize exposure time and keep ultrasound levels low when there is no medical benefit. Use the principle of ALARA (As Low As Reasonably Achievable), increasing output only when needed to obtain diagnostic image quality. Observe the acoustic output display and be familiar with all controls affecting the output level. See the *Bioeffects section* of the *Acoustic Output chapter* in the *Advanced Reference Manual* for more information.

Training

It is recommended that all users receive proper training in applications before performing them in a clinical setting. Please contact the local GE representative for training assistance.

ALARA training is provided by GE Application Specialists. The ALARA education program for the clinical end-user covers basic ultrasound principles, possible biological effects, the derivation and meaning of the indices, ALARA principles, and examples of specific applications of the ALARA principle.

Equipment and Personnel Safety

Related Hazards

WARNING This equipment contains dangerous voltages that are capable of serious injury or death.

If any defects are observed or malfunctions occur, stop operating the equipment and perform the proper action for the patient. Inform a qualified service person and contact a Service Representative for information.

There are no user serviceable components inside the console. Refer all servicing to qualified service personnel only.

WARNING Only approved and recommended peripherals and accessories should be used. All peripherals and accessories must be securely connected to the LOGIQ e.

DANGER The concerns listed below can seriously affect the safety of equipment and personnel during a diagnostic ultrasound examination.

Explosion Hazard Risk of explosion if used in the presence of flammable anesthetics.

Electrical Hazard To avoid injury:

- Do not remove protective covers. No user serviceable parts are inside. Refer service to qualified service personnel.
- To assure adequate grounding, connect the attachment plug to a reliable (hospital grade) grounding outlet.
- Never use any adaptor or converter of a three-prong-to-two-prong type to connect with a mains power plug. The protective earth connection will loosen.
- Do not place liquids on or above the console. Spilled liquid may contact live parts and increase the risk of shock.

Related Hazards (continued)

CAUTION

Do not use this equipment if a safety problem is known to exist. Have the unit repaired and performance verified by qualified service personnel before returning to use.

Smoke & Fire Hazard

The system must be supplied from an adequately rated electrical circuit. The capacity of the supply circuit must be as specified in *Chapter 3* of the *Basic User Manual*.

Biological Hazard

For patient and personnel safety, be aware of biological hazards while performing invasive procedures. To avoid the risk of disease transmission:

- Use protective barriers (gloves and probe sheaths) whenever possible. Follow sterile procedures when appropriate.
- Thoroughly clean probes and reusable accessories after each patient examination and disinfect or sterilize as needed. Refer to *Probes and Biopsy* for probe use and care instructions.
- Follow all infection control policies established by your office, department or institution as they apply to personnel and equipment.

CAUTION

Contact with natural rubber latex may cause a severe anaphylactic reaction in persons sensitive to the natural latex protein. Sensitive users and patients must avoid contact with these items. Refer to package labeling to determine latex content and FDA's March 29, 1991 Medical Alert on latex products.

CAUTION

Archived data is managed at the individual sites. Performing data backup (to any device) is recommended.

CAUTION

Do not use high-frequency surgical equipment with LOGIQ e system.

Device Labels

Label Icon Description

The following table describes the purpose and location of safety labels and other important information provided on the equipment

Table 6: Label Icons

Label/Icon	Purpose/Meaning	Location
Identification and Rating Plate	Manufacture's name and address Date of manufacture Model and serial numbers Electrical ratings (Volts, Amps, phase, and frequency)	See *"Warning Label Locations" on page 58* for more information.
Type/Class Label	Used to indicate the degree of safety or protection.	
IP Code (IPX1 or IPX8) IPX1: FSU-2001 IPX8: MKF 2-MED GP26	Indicates the degree of protection provided by the enclosure per IEC60 529. IPX1 cannot be used in operating room environment; IPX8 can be used in operating room environment.	Bottom of Foot Switch
	Type BF Applied Part (man in the box) symbol is in accordance with IEC 878-02-03.	Beside the probe connector
	Type CF Applied Part (heart in the box) symbol is in accordance with IEC 60878-02-03.	ECG marked Type CF or probes.
	"ATTENTION" - Consult accompanying documents" is intended to alert the user to refer to the operator manual or other instructions when complete information cannot be provided on the label.	Various
	"CAUTION" - Dangerous voltage" (the lightning flash with arrowhead) is used to indicate electric shock hazards.	Various

Table 6: Label Icons

Label/Icon	Purpose/Meaning	Location
	“ON” indicates the power on position of the power switch. **CAUTION:** This Power Switch **DOES NOT ISOLATE** Mains Supply. “Standby” indicates the power standby position of the power switch. **CAUTION:** This Power Switch **DOES NOT ISOLATE** Mains Supply.	Refer to *Chapter 3* in the *Basic User Manual* for location information.
	“Protective Earth” indicates the protective earth (grounding) terminal.	Inside of AC adapter
	NRTL Listing and Certification Mark is used to designate conformance to nationally recognized product safety standards. The mark bears the name and/or logo of the testing laboratory, product category, safety standard to which conformity is assessed and a control number.	Bottom
	Type CF Defib-Proof Applied Part (heart in the box with paddle) symbol is in accordance with IEC 60878-02-06.	ECG Module
	This symbol indicates that waste electrical and electronic equipment must not be disposed of as unsorted municipal waste and must be collected seperately. Please contact an authorized representative of the manufacturer for information concerning the decommissioning of your equipment.	Bottom
	When closing the LCD cover, use caution to avoid injuring hands or fingers as there is a closing mechanism which allows the LCD cover to automatically close.	Bottom
	Indicates the product contains hazardous materials in excess of the limits established by Chinese standard SJ/T11363-2006 Requirements for Concentration Limits for Certain Hazardous Substances in Electronic Information Products. The number in the symbol is the Environment-friendly Use Period (EFUP), which indicates the period during which the toxic or hazardous substances or elements contained in electronic information products will not leak or mutate under normal operating conditions so that the use of such electronic information products will not result in any severe environmental pollution, any bodily injury or damage to any assets.	Rear Panel, Rating Plate

Table 6: Label Icons

Label/Icon	Purpose/Meaning	Location
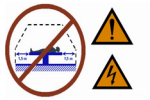	Do not connect the DVD-RW to the system while scanning.	DVD-RW
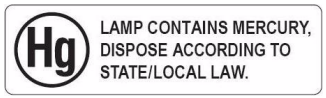	This product consists of devices that may contain mercury, which must be recycled or disposed of in accordance with local, state, or country laws. (Within this system, the backlight lamps in the monitor display contain mercury.)	Bottom panel of the console
	GOST symbol, Russia Regulatory Country Clearance.	Rating Plate

.

Classifications

Type of protection against electric shock

AC adapter is Class I Equipment (*1)

LOGIQ e console is Class I Equipment (*1)

Degree of protection against electric shock

Type BF Applied part (*3) (for Probes marked with BF symbol)

Type CF Applied part (*4) (for ECG marked with CF symbol)

Continuous Operation

System is Ordinary Equipment (IPX0)

Footswitch is IPX1 or IPX8 (for IPX1 is FSU-2001; for IPX8 is Steute MKF 2-MED GP26).

*1. Class I EQUIPMENT

EQUIPMENT in which protection against electric shock does not rely on BASIC INSULATION only, but includes an protective earth ground. This additional safety precaution prevents exposed metal parts from becoming LIVE in the event of an insulation failure.

*2. Class II EQUIPMENT

EQUIPMENT in which protection against electric shock does not rely on BASIC INSULATION only, but in which additional safety precautions such as DOUBLE INSULATION or REINFORCED INSULATION are provided.

*3. Type BF APPLIED PART

TYPE BF APPLIED PART providing a specified degree of protection against electric shock, with particular regard to allowable LEAKAGE CURRENT.

Table 7: Type BF Equipment

	Normal Mode	Single fault condition
Patient leakage current	Less than 100 microA	Less than 500 microA

***4. Type CF Applied Part**

TYPE CF APPLIED PART providing a degree of protection higher than that for Type BF Applied Part against electric shock particularly regarding allowable LEAKAGE CURRENTS.

Table 8: Type CF Equipment

	Normal Mode	Single fault condition
Patient leakage current	Less than 10 microA	Less than 50 microA

EMC (Electromagnetic Compatibility)

NOTE: This equipment generates, uses and can radiate radio frequency energy. The equipment may cause radio frequency interference to other medical and non-medical devices and radio communications. To provide reasonable protection against such interference, this product complies with emissions limits for a Group 1, Class A Medical Devices Directive as stated in EN 60601-1-2. However, there is no guarantee that interference will not occur in a particular installation.

NOTE: If this equipment is found to cause interference (which may be determined by turning the equipment on and off), the user (or qualified service personnel) should attempt to correct the problem by one or more of the following measure(s):

- *reorient or relocate the affected device(s)*
- *increase the separation between the equipment and the affected device*
- *power the equipment from a source different from that of the affected device*
- *consult the point of purchase or service representative for further suggestions.*

NOTE: The manufacturer is not responsible for any interference caused by using other than recommended interconnect cables or by unauthorized changes or modifications to this equipment. Unauthorized changes or modifications could void the users' authority to operate the equipment.

NOTE: To comply with the regulations on electromagnetic interference for a Class A FCC Device, all interconnect cables to peripheral devices must be shielded and properly grounded. Use of cables not properly shielded and grounded may result in the equipment causing radio frequency interference in violation of the FCC regulations.

EMC Performance

All types of electronic equipment may characteristically cause electromagnetic interference with other equipment, either transmitted through air or connecting cables. The term EMC (Electromagnetic Compatibility) indicates the capability of equipment to curb electromagnetic influence from other equipment and at the same time not affect other equipment with similar electromagnetic radiation from itself.

Proper installation following the service manual is required in order to achieve the full EMC performance of the product.

The product must be installed as stipulated *on page 49 "Notice upon Installation of Product"*.

In case of issues related to EMC, please call your service personnel.

The manufacturer is not responsible for any interference caused by using other than recommended interconnect cables or by unauthorized changes or modifications to this equipment. Unauthorized changes or modifications could void the users' authority to operate the equipment.

CAUTION

Do not use devices which intentionally transmit RF signals (cellular phones, transceivers, or radio controlled products) in the vicinity of this equipment as it may cause performance outside the published specifications. Keep the power to these type devices turned off when near this equipment.

Keep power to these devices turned off when near this equipment.

Medical staff in charge of this equipment is required to instruct technicians, patients and other people who may be around this equipment to fully comply with the above regulation.

EMC (Electromagnetic Compatibility) (continued)

Portable and mobile radio communications equipment (e.g. two-way radio, cellular/cordless telephones, and similar equipment) should be used no closer to any part of this system, including cables, than determined according to the following method:

Table 9: Portable and mobile radio communications equipment distance requirements

Frequency Range:	**150 kHz - 80 MHz**	**80 MHz - 800 MHz**	**800 MHz - 2.5 GHz**
Calculation Method:	d=[3.5/V_1] square root of P	d = [3.5/E_1] square root of P	d = [7/E_1] square root of P
Where: d= separation distance in meters, P = rated power of the transmitter, V_1=compliance value for conducted RF, E_1 = compliance value for radiated RF			
If the maximum transmitter power in watts is rated	**The separation distance in meters should be**		
5	2.6	2.6	5.2
20	5.2	5.2	10.5
100	12.0	12.0	24.0

Notice upon Installation of Product

Separation distance and effect from fixed radio communications equipment: field strengths from fixed transmitters, such as base stations for radio (cellular/cordless) telephones and land mobile radios, amateur radio, AM and FM radio broadcast, and TV broadcast transmitter cannot be predicted theoretically with accuracy. To assess the electromagnetic environment due to fixed RF transmitters, an electromagnetic site survey should be considered. If the measured field strength in the location in which the ultrasound system is used exceeds the applicable RF compliance level as stated in the immunity declaration, the ultrasound system should be observed to verify normal operation. If abnormal operation is observed, additional measures may be necessary, such as re-orienting or relocating the ultrasound system or using an RF shielded examination room may be necessary.

1. Use either power supply cords provided by GE Medical Systems or ones designated by GE Medical Systems. Products equipped with a power source plug should be plugged into the fixed power socket which has the protective grounding conductor. Never use any adaptor or converter to connect with a power source plug (i.e. three-prong-to-two-prong converter).
2. Locate the equipment as far away as possible from other electronic equipment.
3. Be sure to use only the cables provided by or designated by GE Medical Systems. Connect these cables following the installation procedures (i.e. wire power cables separately from signal cables).
4. Lay out the main equipment and other peripherals following the installation procedures described in the Option Installation manuals.

General Notice

1. Designation of Peripheral Equipment Connectable to This Product.
   The equipment indicated on *Chapter 3* of the *Basic User Manual* can be hooked up to the product without compromising its EMC performance.
   Avoid using equipment not designated in the list. Failure to comply with this instruction may result in poor EMC performance of the product.
2. Notice against User Modification
   The user should never modify this product. User modifications may cause degradation in EMC performance.
   Modification of the product includes changes in:
   a. Cables (length, material, wiring, etc.)
   b. System installation/layout
   c. System configuration/components
   d. Securing system parts (cover open/close, cover screwing)
3. Operate the system with all covers closed. If a cover is opened for some reason, be sure to shut it before starting/resuming operation.
4. Operating the system with any cover open may affect EMC performance.

Peripheral Update for EC countries

The following is intended to provide the users in EC countries with updated information concerning the connection of the LOGIQ e to image recording and other devices or communication networks.

Peripherals Used in the Patient Environment

The LOGIQ e has been verified for overall safety, compatibility and compliance with the following on-board image recording device:

- Sony UP-D897 Digital Printer
- Sony UP-D23MD Color Printer

The LOGIQ e may also be used safely while connected to devices other than those recommended above if the devices and their specifications, installation, and interconnection with the system conform to the requirements of IEC/EN 60601-1-1

CAUTION The connection of equipment or transmission networks other than as specified in the user instructions can result in an electric shock hazard or equipment malfunction. Substitute or alternate equipment and connections requires verification of compatibility and conformity to IEC/EN 60601-1-1 by the installer. Equipment modifications and possible resulting malfunctions and electromagnetic interference are the responsibility of the owner.

General precautions for installing an alternate device in patient environment would include:

1. The added device must have appropriate safety standard conformance and CE Marking.
2. There must be adequate stability of the combination between LOGIQ e and Peripherals.
3. Risk and leakage current of the combination must comply with IEC/EN 60601-1.
4. Electromagnetic emissions and immunity of the combination must conform to IEC/EN 60601-1-2.

Peripheral Update for EC countries (continued)

Peripherals Used in the Non-Patient environment

The LOGIQ e has also been verified for compatibility, and compliance for connection to a local area network (LAN) via a wireless LAN, provided the LAN components are IEC/EN 60950 compliant.

The LOGIQ e has also been verified for compatibility, and compliance for connection to a DVD-Writer via system Serial port, provided the DVD-Writer is IEC/EN 60950 compliant.

General precautions for installing an alternate remote device or a network in the non-patient environment would include:

1. The added device(s) must have appropriate safety standard conformance and CE Marking.
2. The added device(s) must be used for their intended purpose having a compatible interface.

CAUTION Please make sure to disconnect the DVD-Writer and Wireless LAN while scanning a patient.

Declaration of Emissions

This system is suitable for use in the following environment. The user must assure that it is used only in the electromagnetic environment as specified.

Table 10: Declaration of Emissions

Emission Type	Compliance	Electromagnetic Environment
CISPR 11 RF Emissions	Group 1 Class A	This system uses RF energy only for its internal function. Therefore, RF emissions are very low and are not likely to cause any interference in nearby electronic equipment. It is suitable for use in all establishments, including *(Class B)* / other than *(Class A)* domestic establishments and those directly connected to the public low-voltage power supply network that supplies buildings used for domestic purposes. *Note: Select only one underlined word(s) according to CISPR Class A/B.*

Declaration of Immunity

This system is suitable for use in the following environment. The user must assure that the system is used according to the specified guidance and only in the electromagnetic environment listed.

Table 11: Declaration of Immunity

Immunity Type	Test Level	Compliance	EMC Environment and Guidance
IEC 61000-4-2 Static discharge (ESD)	± 6 kV contact ± 8 kV air	± 6 kV contact ± 8 kV air	Floors should be wood, concrete, or ceramic tile. If floors are covered with synthetic material, the relative humidity should be at least 30%. Mains power quality should be that of a typical commercial and/or hospital environment. If the user requires continued operation during power mains interruptions, it is recommended that the system be powered from a UPS or a battery. NOTE: UT is the a.c. mains voltage prior to application of the test level. Power frequency magnetic fields should be at levels characteristic of a typical location in a typical commercial and/or hospital environment. Separation distance to radio communication equipment must be maintained according to the method below. Interference may occur in the vicinity of equipment marked with the symbol:
IEC 61000-4-4 Electrical fast transient/burst	± 2 kV for mains ± 1 kV for SIP/SOP	± 2 kV for mains ± 1 kV for SIP/SOP	
IEC 61000-4-5 Surge Immunity	± 1 kV differential ± 2 kV common	± 1 kV differential ± 2 kV common	
IEC 61000-4-11 Voltage dips, short interruptions and voltage variations on mains supply	< 5% U_T (> 95% dip) for 0.5 cycle; 40% U_T (60% dip) for 5 cycles; 70% U_T (30% dip) for 25 cycles; < 5% U_T (>95% dip) for 5 sec	< 5% U_T (> 95% dip) for 0.5 cycle; 40% U_T (60% dip) for 5 cycles; 70% U_T (30% dip) for 25 cycles; < 5% U_T (>95% dip) for 5 sec	
IEC 61000-4-8 Power frequency (50/60 Hz) magnetic field	3 A/m	3 A/m	
IEC 61000-4-6 Conducted RF	3 V_{RMS} 150 kHz - 80 MHz	3 V_{RMS} 150 kHz - 80 MHz	
IEC 61000-4-3 Radiated RF	3 V/m 80 MHz - 2.5 GHz	3 V/m 80 MHz - 2.5 GHz	
NOTE: These guidelines may not apply in all situations. Electromagnetic propagation is affected by absorption and reflection from structures, objects, and people.			

Patient Environmental Devices

1.
Left Side
- **2 USB Ports**
  - USB Hub
  - Peripheral devices
  - Printers (B/W, Color and USB)
  - Memory Stick
  - Footswitch
  - Wireless LAN Adapter
  - ECG
  - USB HDD
- **1 Earphone Port**

4.
Rear Panel
- 1 VGA Port
- 1 Network Port
- 1 Docking Port

3.
Right Side
Probe Port, Security lock

2.
Bottom Side
Lithium-ion Battery Port

Figure 10. Patient Environmental Devices

Acceptable Devices

The devices shown in “Patient Environmental Devices” on page 44 are specified to be suitable for use within the PATIENT ENVIRONMENT.

CAUTION DO NOT connect any probes or accessories without approval by GE within the PATIENT ENVIRONMENT.

See *”Peripheral Update for EC countries” on page 51* for more information.

Unapproved Devices

CAUTION Unapproved devices, such as unsupported printers, VCRs, etc. should not be used in the patient environment.

If devices are connected without the approval of GE, the warranty will be INVALID.

Any device connected to the LOGIQ e must conform to one or more of the requirements listed below:

1. IEC standard or equivalent standards appropriate to devices.
2. The devices shall be connected to PROTECTIVE EARTH (GROUND).

Accessories, Options, Supplies

CAUTION Unsafe operation or malfunction may result. Use only the accessories, options and supplies approved or recommended in these instructions for use.

Acoustic Output

Located on the upper right section of the system display monitor, the acoustic output display provides the operator with a real-time indication of acoustic levels being generated by the system. See the *Acoustic Output chapter* in the *Advanced Reference Manual* for more information. This display is based on NEMA/AIUM Standards for Real-time Display of Thermal and Mechanic Acoustic Output Indices on Diagnostic Ultrasound Equipment.

Acoustic Output Display Specifications

The display consists of three parts: Thermal Index (TI), Mechanical Index (MI), and a relative Acoustic Output (AO) value. Although not part of the NEMA/AIUM standard, the AO value informs the user of where the system is operating within the range of available output. Depending on the examination and type of tissue involved, the TI parameter will be one of three types:

- **Soft Tissue Thermal Index (TIS)**. Used when imaging soft tissue only, it provides an estimate of potential temperature increase in soft tissue.
- **Bone Thermal Index (TIB)**. Used when bone is near the focus of the image as in the third trimester OB examination, it provides an estimate of potential temperature increase in the bone or adjacent soft tissue.
- **Cranial Bone Thermal Index (TIC)**. Used when bone is near the skin surface as in transcranial examination, it provides an estimate of potential temperature increase in the bone or adjacent soft tissue.

The TI and MI is displayed at all times. The MI display starts at a value of 0.0 and increments in steps of 0.1 while the TI display starts at a value of 0.4 and increments in steps of 0.1 (values less than 0.4 are displayed as < 0.4). Display precision is ± 0.1, and accuracy is ± 50%.

Controls Affecting Output

The potential for producing mechanical bioeffects (MI) or thermal bioeffects (TI) can be influenced by the certain controls.

Direct. The Acoustic Output control has the most significant effect on Acoustic Output.

Indirect. Indirect effects may occur when adjusting controls. Controls that can influence MI and TI are detailed under the Bioeffects portion of each control in the *Modes chapter* of the *Basic User Manual*.

Always observe the acoustic output display for possible effects.

Best practices while scanning

HINTS

Increase the Acoustic Output only after attempting image optimization with controls that have no effect on Acoustic Output, such as Gain and TGC.

NOTE: Refer to the Optimization sections of the Modes chapter for a complete discussion of each control.

WARNING

Be sure to have read and understood control explanations for each Mode used before attempting to adjust the Acoustic Output control or any control that can effect Acoustic Output.

Acoustic Output Hazard

Use the minimum necessary acoustic output to get the best diagnostic image or measurement during an examination. Begin the exam with the probe that provides an optimum focal depth and penetration.

Acoustic Output Default Levels

In order to ensure that an exam does not start at a high output level, the LOGIQ e initiates scanning at a reduced default output level. This reduced level is a programmable preset and depends upon the exam category and probe selected. It takes effect when the system is powered on or ***New Patient*** is selected.

Warning Label Locations

Console Labels

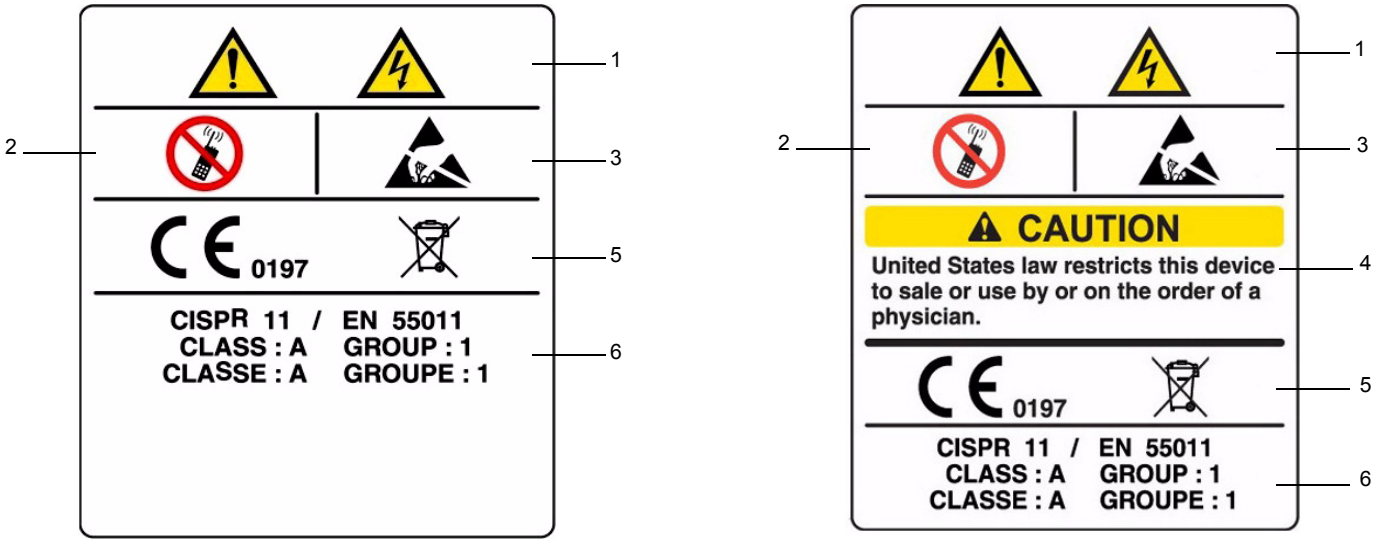

Figure 2-1. Label Location

1. Possible shock hazard. Do not remove covers or panels. No user serviceable parts are inside. Refer servicing to qualified service personnel.
2. Do not use the following devices near this equipment: cellular phone, radio receiver, mobile radio transmitter, radio controlled toy, etc. Use of these devices near this equipment could cause this equipment to perform outside the published specifications. Keep power to these devices turned off when near this equipment.
3. Be aware of the possibility of static discharge.
4. Prescription Device (For U.S.A. Only). Does not exist in the label on LOGIQ e in China.
5. The CE Mark of Conformity indicates this equipment conforms with the Council Directive 93/42/EEC. The right is its recycle mark.
6. CISPR
   CAUTION: The LOGIQ e conforms to the CISPR11, Group 1, Class A of the international standard for Electromagnetic disturbance characteristics.

Console Labels (continued)

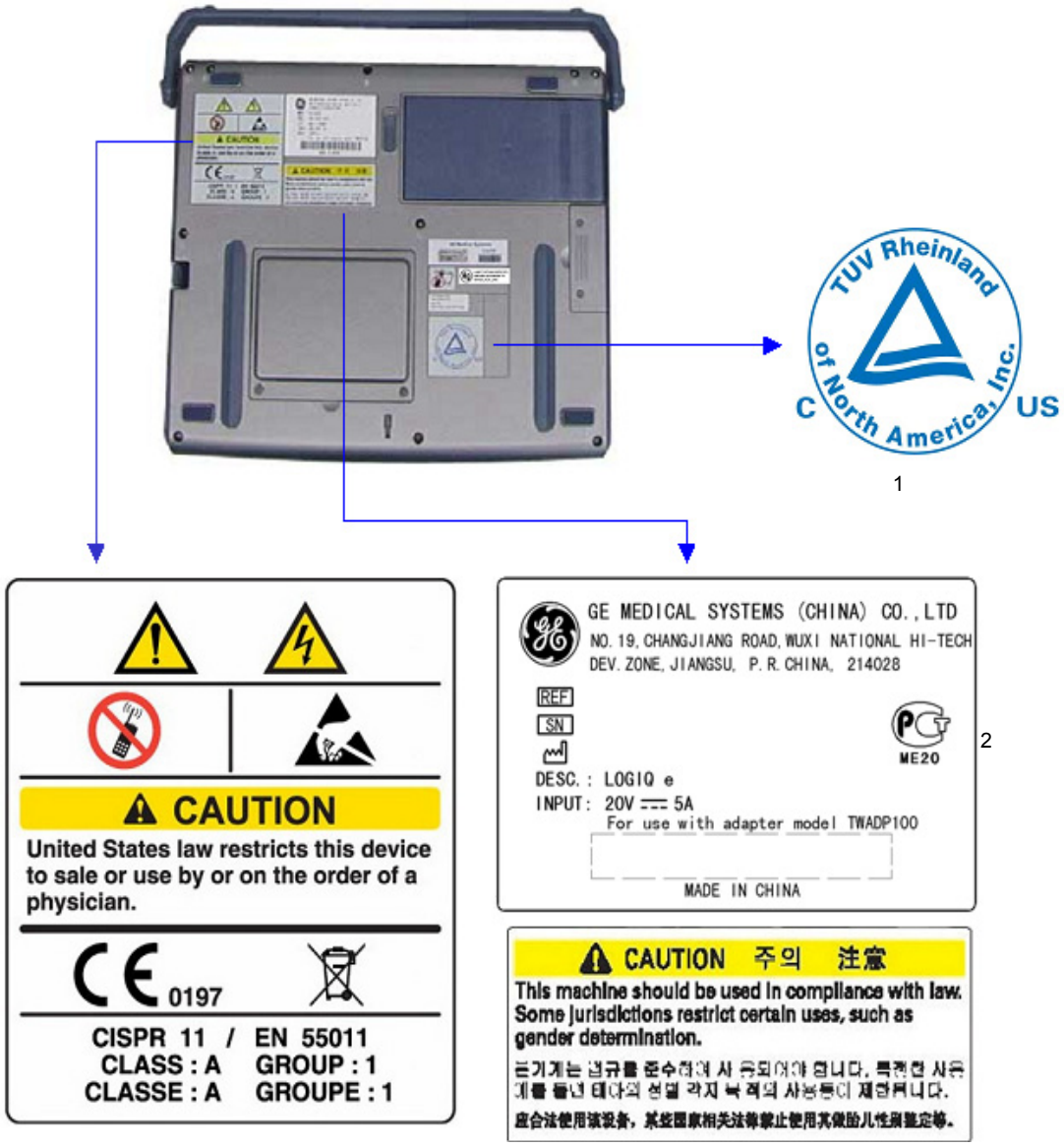

1. cTUVus Label: NRTL Listing and Certification Mark is used to designate conformance to nationally recognized product safety standards. The Mark bears the name and/or logo of the testing laboratory, product category, safety standard to which conformity is assessed, and a control number.
2. Identification and Rating Plate–USA/Asia 120V Console

Figure 2-2. Label Location on LOGIQ e (Outside of China)

Console Labels (continued)

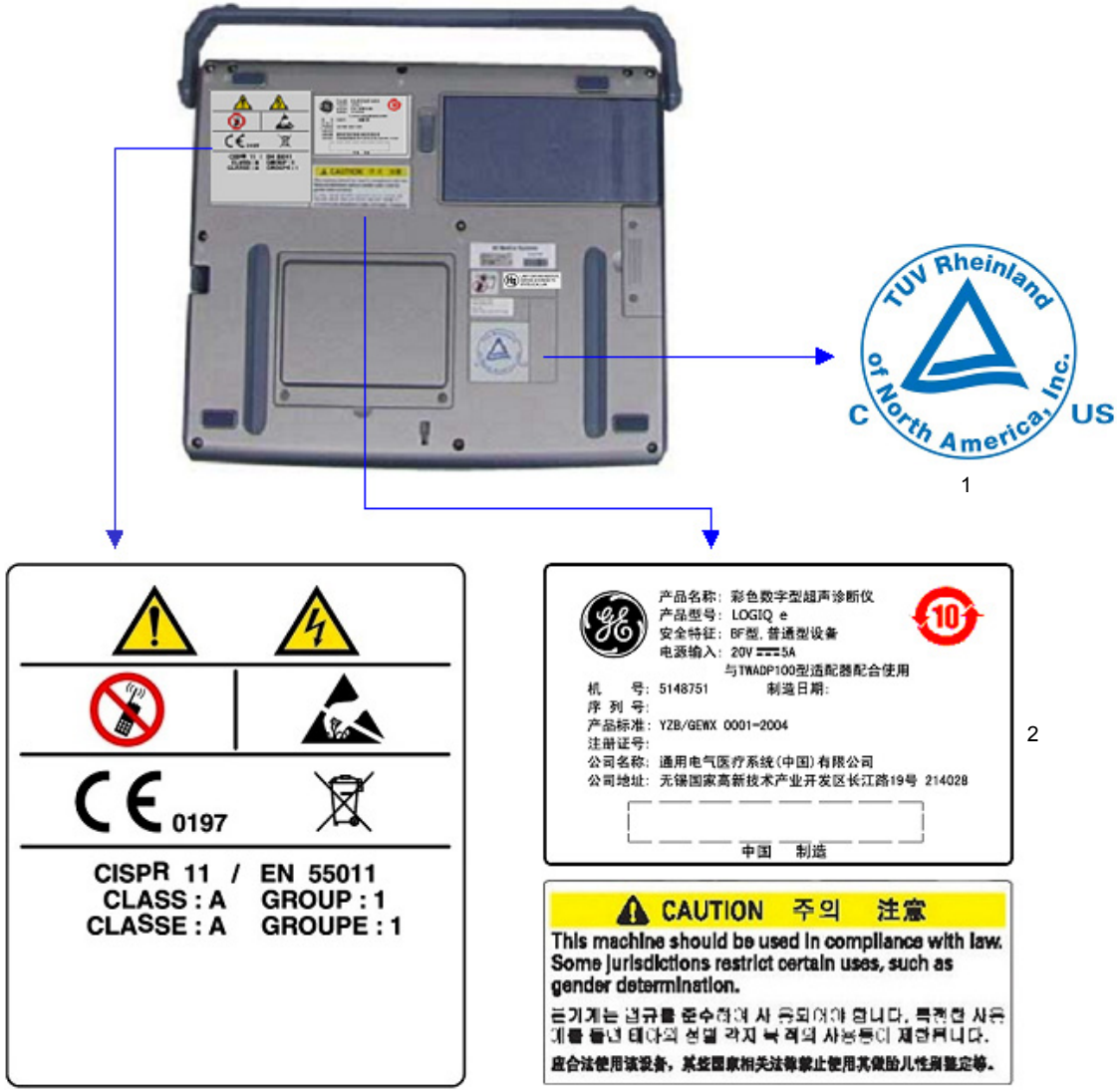

1. cTUVus Label: NRTL Listing and Certification Mark is used to designate conformance to nationally recognized product safety standards. The Mark bears the name and/or logo of the testing laboratory, product category, safety standard to which conformity is assessed, and a control number.

2. Rating Plate–China 220V Console

Figure 14. Label Location on LOGIQ e (China)

Fax Back Form

You can order printed documentation by faxing this form to Coakley-Tech.

FAX

Customer Name	Telephone Number	Mailing Address

Fax To:	Fax Number:	Attention:
Coakley-Tech	(414) 389-9130	Norm Keene

In the publications list below, please select only those printed manuals required.

Publication		Language (Direction Number)	Publication		Language (Direction Number)
Basic User Manual (please select one language)		English (5314622-100)	Basic Service Manual		English (5198174-100)
		French (5314622-101)	Advanced Reference Manual		English (5314625-100)
		Spanish (5314622-106)			
		Portuguese (5314622-127)			