Barnstead International

Apogent

Cimarec™ Stirring Hot Plates

OPERATION MANUAL AND PARTS LIST

Model #	Top Plate Size	Voltage
SP131014	4x4	100
SP131015	4x4	120
SP131010-33	4x4	220-240
SP131324	7x7	100
SP131325	7x7	120
SP131320-33	7x7	220-240
SP131634	10x10	100
SP131635	10x10	120
SP131630-33	10x10	220-240

LT1313X1 • 3/8/04

Table of Contents

Safety Information 3
Warnings 3
Specifications 5
Heating Specifications 6
Stirring Speed Specifications 6
Environmental Conditions 7
Declaration of Conformity....7
Introduction....8
General Usage 8
Principles of Operation....9
Unpacking and Installation 10
Unpacking 10
Installation 10
Operation 11
Setting the Stirring Speed 11
Setting the Temperature....12
To Achieve Fast Heat-Up of Large Volumes 12
Heating Small Volumes 12
Heating Metal Vessels and Sand Baths....13
Maintenance....14
General Cleaning Instructions 14
Troubleshooting 15
Error Codes 15
Exploded Views 16
Wiring Diagram....22
Replacement Parts....23
Accessories 23
Ordering Procedures 24
Warranty....28

Safety Information

Alert Signals

Warning
Warnings alert you to a possibility of personal injury.

Caution
Cautions alert you to a possibility of damage to the equipment.

Note
Notes alert you to pertinent facts and conditions.

Hot Surface
Hot surfaces alert you to a possibility of personal injury if you come in contact with a surface during use or for a period of time after use.

Your Barnstead|Thermolyne Cimarec Stirring Hot Plate has been designed with function, reliability, and safety in mind. It is your responsibility to install it in conformance with local electrical codes. For safe operation, please pay attention to the alert signals throughout the manual.

This manual contains important operating and safety information. The user must carefully read and understand the contents of this manual prior to the use of this equipment.

Warnings

To avoid electrical shock, always:

1. Use a properly grounded electrical outlet of correct voltage and current handling capacity.

2. Disconnect from the power supply prior to maintenance and servicing.

To avoid personal injury:

1. Do not use in the presence of flammable or combustible materials — fire or explosion may result. This device contains components which may ignite such materials. Not rated for use in hazardous atmospheres.

2. Use caution when heating volatile materials; top surface and element can reach the “Flash Point Temperature” of many chemicals. These stirring hot plates are not explosion proof. Fire or explosion may result. Unit contains components which may ignite such materials.

3. Keep top surface clean. Use a non-abrasive cleaner. Alkali spills, hydrofluoric acid spills or phosphoric acid spills may damage top and lead to thermal failure. Unplug unit and remove spills promptly. Do not immerse unit for cleaning.

4. Replace the top immediately if damaged by etching, scratching or chipping. A damaged top can break in use.

5. Do not use metal foil on hot plate which may block air flow. Overheating will result.

6. Check and tighten the removable cord periodically making sure it is secure. If loosened, the cord could become hot and/or spark and be a potential fire hazard. If cord appears damaged, replace immediately. If cord is repeatedly loosened it is recommended to purchase the cord retaining clip (part number AY1313X1 or AY1313X2) listed in the Replacement Parts section of this manual.

7. Do not remove or modify grounded power plug. Use only properly grounded outlets to avoid shock hazard.

8. Use appropriate hand and eye protection when handling hazardous chemicals.

9. Gross weight of items placed on top of stirring hot plates should not exceed 35 lbs. (15.9 kg.) on the 10” x 10” models, 25 lbs. (11.3 kg) on the 7” x 7” models, and 15 lbs. (6.8 kg.) on the 4” x 4” models.

10. “Caution: Hot Top. Avoid Contact.” The top plate of the unit can remain hot for some time after use. A “CAUTION - HOT TOP” light will remain on until top plate temperature cools to below 50°C.

11. Note that the exterior housing will be hot during and for a period of time after use.

12. Refer servicing to qualified personnel.

Specifications

4" X 4"

Model Number	SP131015	SP131010-33	SP131014
		Overall Dimensions in. (cm)	
Width	5.0” (12.7 cm)	5.0” (12.7 cm)	5.0” (12.7 cm)
Height	3.6" (9.7 cm)	3.6" (9.7 cm)	3.6" (9.7 cm)
Depth	10.0" (25.4 cm)	10.0" (25.4 cm)	10.0" (25.4 cm)
Weight lbs (kg)	7.0 lbs (3.2 kg)	7.0 lbs (3.2 kg)	7.0 lbs (3.2 kg)
		Top Plate	
Width	4.25" (10.8 cm)	4.25" (10.8 cm)	4.25" (10.8 cm)
Height	1.0" (2.5 cm)	1.0" (2.5 cm)	1.0" (2.5 cm)
Depth	4.25" (10.8 cm)	4.25" (10.8 cm)	4.25" (10.8 cm)
		Electrical Ratings	
Volts	120	220-240	100
Amps	3.3	1.8	4.1
Watts	395	440	410
Freq.	60	50/60	50/60
Phase	1	1	1
Max. Temp. °F (°C)	1004°F (540°C)	1004°F (540°C)	1004°F (540°C)

7" X 7"

Model Number	SP131325	SP131320-33	SP131324
		Overall Dimensions in. (cm)	
Width	8.2” (20.8 cm)	8.2” (20.8 cm)	8.2” (20.8 cm)
Height	3.8” (9.7 cm)	3.8” (9.7 cm)	3.8” (9.7 cm)
Depth	13.0” (33.0 cm)	13.0” (33.0 cm)	13.0” (33.0 cm)
Weight lbs (kg)	11.0 lbs (5.0 kg)	11.0 lbs (5.0 kg)	11.0 lbs (5.0 kg)
		Top Plate	
Width	7.25” (18.4 cm)	7.25” (18.4 cm)	7.25” (18.4 cm)
Height	1.0" (2.5 cm)	1.0" (2.5 cm)	1.0" (2.5 cm)
Depth	7.25” (18.4 cm)	7.25” (18.4 cm)	7.25” (18.4 cm)
		Electrical Ratings	
Volts	120	220-240	100
Amps	8.9	4.9	11.0
Watts	1070	1170	1095
Freq.	60	50/60	50/60
Phase	1	1	1
Max. Temp. °F (°C)	1004°F (540°C)	1004°F (540°C)	1004°F (540°C)

10" X 10"

Model Number	SP131635	SP131630-33	SP131634
		Overall Dimensions in. (cm)	
Width	11.38” (28.9 cm)	11.38” (28.9 cm)	11.38” (28.9 cm)
Height	4.0” (10.2 cm)	4.0” (10.2 cm)	4.0” (10.2 cm)
Depth	16.25” (41.3 cm)	16.25” (41.3 cm)	16.25” (41.3 cm)
Weight lbs (kg)	13.75” (6.24 kg)	13.75” (6.24 kg)	13.75” (6.24 kg)
		Top Plate	
Width	10.5” (26.7 cm)	10.5” (26.7 cm)	10.5” (26.7 cm)
Height	1.0" (2.5 cm)	1.0" (2.5 cm)	1.0" (2.5 cm)
Depth	10.5" (26.7 cm)	10.5" (26.7 cm)	10.5" (26.7 cm)
		Electrical Ratings	
Volts	120	220-240	100
Amps	12	6.5	11.5
Watts	1440	1550	1150
Freq.	60	50/60	50/60
Phase	1	1	1
Max. Temp. °F (°C)	750°F (400°C)	750°F (400°C)	750°F (400°C)

Heating Specifications

Top Plate Surface - Solid Ceramic

Temperature range	
All 4" x 4" and 7" x 7" models:	41°F to 1004°F (5°C* - 540°C)
All 10" x 10" models:	41°F to 752°F (5°C - 400°C)
Heat-up time to maximum temperature (unloaded top plate).	8 minutes
Temperature stability at the center of the top plate surface (@ 100°C).	± 2.0°C
Accuracy of the temperature display vs the actual average temperature of a 2” diameter of settingarea at the center of the top plate (setpoint 100°C). (Top plate temperature was verified with an infrared camera mounted approx. 26" above the center of the top plate surface; temperature accuracy at the edges of the top plate may vary from the stated accuracy.)	± 5.0°C

Stirring Speed Specifications

Speed Range 60 to 1200 RPM
(Maximum speed is dependent on the viscosity of the solution)

Speed Dial Position	Estimated Stirring Speed
2	60 rpm
4	125 rpm
6	350 rpm
8	700 rpm
10	1100 rpm
12	1200 rpm

Stability of the stirring speed setpoint (600 ml of water in a 1000 ml glass flask) ± 5.0%

Top Plate Size	Max Recommended Flask Size	Max Weight on Top Plate
4" x 4"	1 liter	15 lbs
7" x 7"	4 liters	25 lbs
10" x 10"	6 liters	35 lbs

** This stirring hot plate does not cool. The minimum temperature is 5°C if used in a cold room.*

Environmental Conditions

Operating:	17°C to 27°C; 20% to 80% relative humidity, non-condensing. Installation category II (overvoltage) in accordance with IEC 664. Pollution degree 2 in accordance with IEC 664. Altitude Limit: 2,000 meters.
Storage:	-25°C to 65°C 10% to 85% relative humidity

Declaration of Conformity

(for 220-240 volt, -33 CE models only)

Barnstead International hereby declares under its sole responsibility that this product conforms with the technical requirements of the following standards:

EMC:	EN 61000-3-2	Limits for harmonic current emissions
	EN 61000-3-3	Limits for voltage fluctuations and flicker
	EN 61326-1	Electrical equipment for measurement, control, and laboratory use; Part I: General Requirements
Safety:	EN 61010-1	Safety requirements for electrical equipment for measurement, control, and laboratory use; Part I: General Requirements
	EN 61010-2-010	Part II: Particular requirements for laboratory equipment for the heating of materials
	EN 61010-2-051	Part II: Particular requirements for laboratory equipment for mixing and stirring

per the provisions of the Electromagnetic Compatibility Directive 89/336/EEC, as amended by 92/31/EEC and 93/68/EEC, and per the provisions of the Low Voltage Directive 73/23/EEC, as amended by 93/68/EEC.

The authorized representative located within the European Community is:

Electrothermal Engineering Ltd.
419 Sutton Road
Southend On Sea
Essex SS2 5PH
United Kingdom

Copies of the Declaration of Conformity are available upon request.

Introduction

Please read all the information in this manual before operating the unit.

Your Barnstead|Thermolyne Cimarec stirring hot plate is a general purpose heating and stirring plate designed for laboratory procedures requiring precise control of temperature and/or stirring speed. Each Cimarec stirring hot plate model includes a digital display for monitoring actual temperature. The hot plate is capable of producing accurately controlled top plate temperatures from 5°C through 540°C on all 4" x 4" and 7" x 7" models, and the 5°C through 400°C on 10" x 10" models. The temperature is controlled at the plate surface by an internal sensor.

The stirrer will accurately maintain stirring speeds from 60 rpm up to 1200 rpm. The top plate on the Cimarec units is solid ceramic, and is suitable for use with glass or metal vessels.

Your Cimarec stirring hot plate may be used for general purpose heating applications and/or general laboratory mixing of solutions, including sample preparation, heating reagents, melting paraffin, warming resinous chemicals, content analysis, solvent evaporations, digestions, media preparation and sterilization, titrations, sand baths, and microscale chemistry.

General Usage

Do not use this product for anything other than its intended usage.

Principles of Operation

Each Cimarec unit utilizes the latest in microprocessor technology to deliver a reliable, controlled, ceramic top stirring hot plate.

Your Cimarec stirring hot plate has an electronic closed-loop feedback control which will accurately maintain temperature setpoints from 5°C through 400°C or 540°C, depending on the model. Top plate surface temperatures are tested using the latest in infrared temperature measurement. The measurements are made with an infrared camera mounted approximately 26" above the top surface of the stirring hot plate. If the temperature measurement of the ceramic top is made with measurement devices other than infrared, the error of the measuring technique may be greater than the error of the unit.

The electronic stirring speed control will maintain the speed setpoint when the unit is loaded at ±5.0%. The motor in the Cimarec stirring hot plates produces maximum stirring torque under normal laboratory load conditions, and is combined with a powerful magnet to provide exceptional magnetic coupling with a stir bar.

When stirring is turned off, the unique braking feature* on the Cimarec models immediately brings the fluid and stir bar down to a safe speed for quick flask removal.

** Patent Pending*

Unpacking and Installation

Unpacking

Remove your Cimarec stirring hot plate from the carton. Inspect to ensure that the unit has not been damaged during shipment. If the unit appears to have sustained shipping damage contact the distributor from whom you purchased this product or Barnstead International Customer Service at 800-553-0039. Check for stir bar and thumbscrew prior to discarding packaging.

The following items are included in the shipment:
Cimarec Stirring Hot Plate
Cord
Stir Bar
Adapter (100V models only)
Knob
Operator's Manual

If any of these items are missing from the carton, contact Barnstead International.

Warning
Use a properly grounded electrical outlet of correct voltage and current handling capacity.

Installation

Set the unit on a flat stable surface at least 12" away from combustible materials, and plug the cordset into a properly grounded electrical outlet of correct voltage and current handling capacity.

Operation

Warning
Use caution when heating volatile materials; top surface and element can reach the “Flash Point Temperature” of many chemicals. These hot plates and stirring hot plates are not explosion proof. Fire or explosion may result. Unit contains components which may ignite such materials.

Use appropriate hand and eye protection when handling hazardous chemicals.

“Caution: Hot Top. Avoid Contact.” The top plate of the unit can remain hot for some time after use. A “CAUTION - HOT TOP” light will remain on until top plate temperature cools to below 50°C.

Caution
To avoid damage to the top plate or heating element, always keep a vessel filled with liquid on the top plate of a stirring hot plate when the unit is heating or cooling.

When plugging in the stirring hot plate and powering it up for the first time, you will see the software version and hertz displayed briefly on the digital display.

There is no ON/OFF button on the Cimarec stirring hot plate. Simply turn the HEAT and STIR knobs clockwise to activate.

Setting the Stirring Speed

Your Cimarec stirring hot plate has an electronic feedback speed control which will maintain a speed setpoint from 60 rpm through 1200 rpm at ±5.0%. (Maximum speed is dependent on viscosity of the solution.) The Cimarec stirring hot plates are equipped with a strong magnet and high torque motor which will draw a vortex in up to 1800 ml of water stirred in a 2 liter flask with a new 2" stir bar (4"x4" models include a 1" stir bar.)

To set the speed, turn the STIR knob to your desired setting. Turn the knob clockwise to increase the speed or counter-clockwise to decrease the speed. To discontinue stirring, turn knob counter-clockwise to OFF.

Setting the Temperature

Your Cimarec stirring hot plate has an electronic closed-loop feedback control which will accurately maintain temperature setpoints in 5° increments from 5°C through 400°C or 540°C, depending on the model. An unloaded hot plate will heat to maximum temperature in just 8 minutes. The temperature is controlled at the top plate by the internal sensor. A “CAUTION - HOT TOP” light on the front panel will illuminate whenever the top surface temperature exceeds 50°C.

Your Cimarec stirring hot plate will display the temperature in °C. When choosing a setpoint, the display will indicate the setpoint for 5 seconds, after which the display will flash until the desired setpoint is reached.

The display will alternate between “HOT” and “OFF”, and the “CAUTION - HOT TOP” light will flash until the top surface has cooled to below 50°C. Nothing will be displayed on the screen when the unit has been cooled below 50°C and the knob is turned to OFF.

Note
The solution temperature is approximately 25% cooler than the hot plate surface temperature.

To Achieve Fast Heat-up of Large Volumes

If you are heating larger volumes, faster heating can be achieved by turning the heat control knob to maximum temperature until the solution starts to heat, and then turning the setpoint back to your desired top plate temperature. The display will flash the new setpoint until that temperature has been reached.

Note
If you allow the top plate to reach the maximum temperature of 540°C while preheating and then turn the control down to a setpoint less than 200°C, the temperature of the top will drop rapidly to 200°C. Because of the natural cooling characteristics of ceramic, the temperature of the top will drop much more gradually after the top plate temperature reaches 200°C.

Heating Small Volumes

Preheating small volumes is not necessary as it may cause the temperature to overshoot the desired setpoint.

Note
Boiling times are dependent on solution volume and the surface area of the flask that is exposed to the hot plate. For example, when heating the same amount of solution in a 2L flask vs. a 1L flask, the solution will heat about 20% faster.

Heating Metal Vessels and Sand Baths

Cimarec is capable of precisely regulating the top plate temperature, metal vessels and sand baths may be heated safely without the danger of the ceramic top breaking. Use the lowest temperature setting possible for applications to limit thermal stress to the ceramic top. Using a metal vessel or sand bath may reduce the life of the stirring hot plate.

Maintenance

General Cleaning Instructions

Wipe exterior surfaces with lightly dampened cloth containing mild soap solution.

Troubleshooting

Error Codes

The following errors should not be addressed by the user. If any of the errors appear, contact Barnstead International Technical Service at 800-553-0039.

Displayed Message	Intended to Detect	Cause	Solution
E01 **Call Tech. Service**	Thermocouple out of range.	Thermocouple not connected. Thermocouple open circuit.	Replace element assembly (attached to thermocouple).
E02 **Call Tech. Service**	Excessive heat-up time.	Thermocouple short circuit. Failure of element. Failure of element circuit.	Remove short. Replace element assembly (attached to thermocouple). Replace Element. Replace Control Board.
E11 **Call Tech. Service**	Alternating current measurement failure.	Failure to detect alternating current.	Replace Control Board.
E12 **Call Tech. Service**	Motor system failure.	Locked rotor condition. Failure of motor. Failure of motor circuit. Failure of motor sensor.	Free locked rotor. Replace motor. Replace Control Board. Replace motor sensor.

Notes:
Errors E01 and E02 are heating errors. Error Handler will lock out heating functions if heating error is detected. Stirring functionality is unaffected.

Errors E11 and E12 are stirring errors. Error Handler will lock out stirring functions if stirring error is detected. Heating functionality is unaffected.

Exploded Views

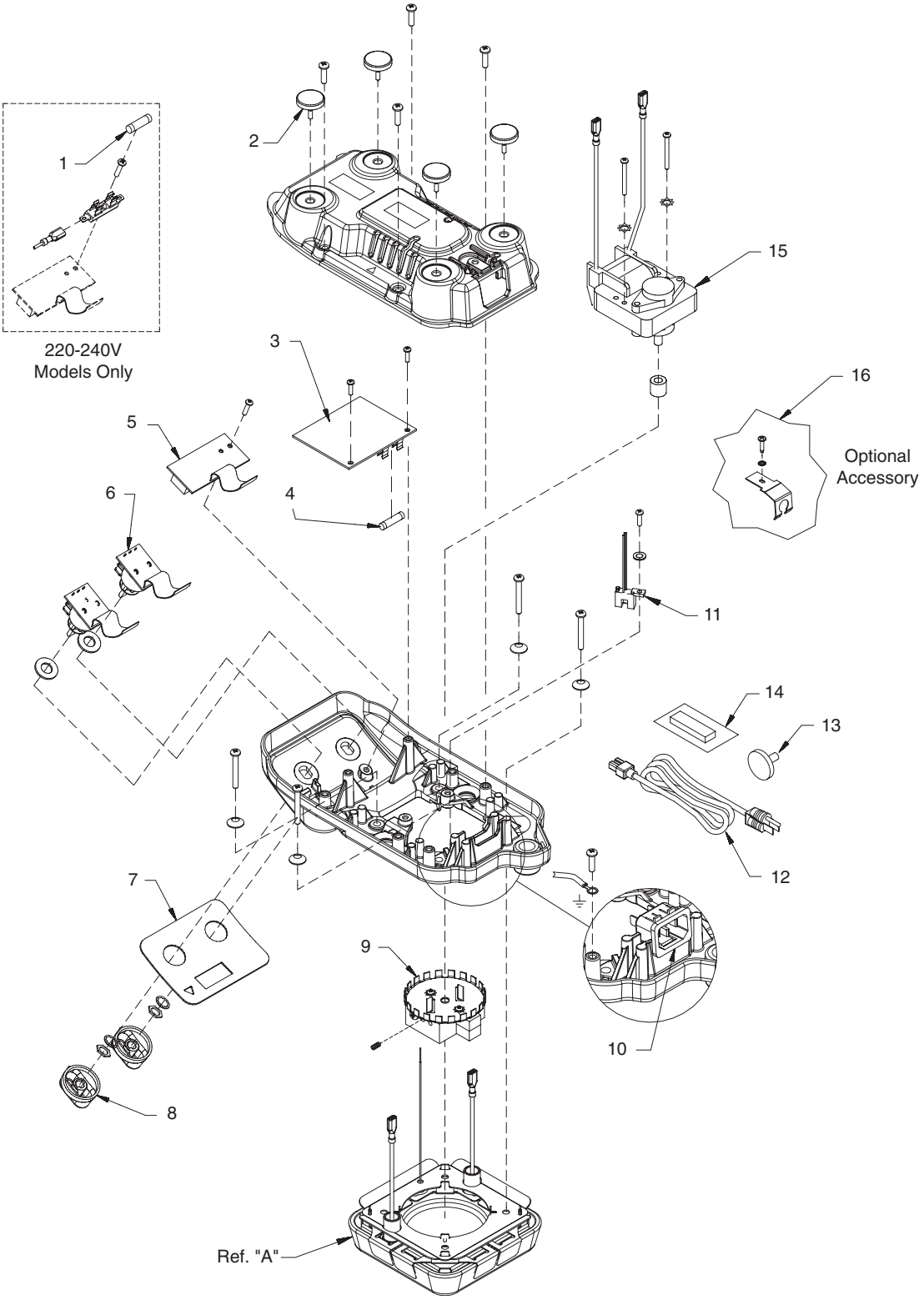

4x4 Exploded View

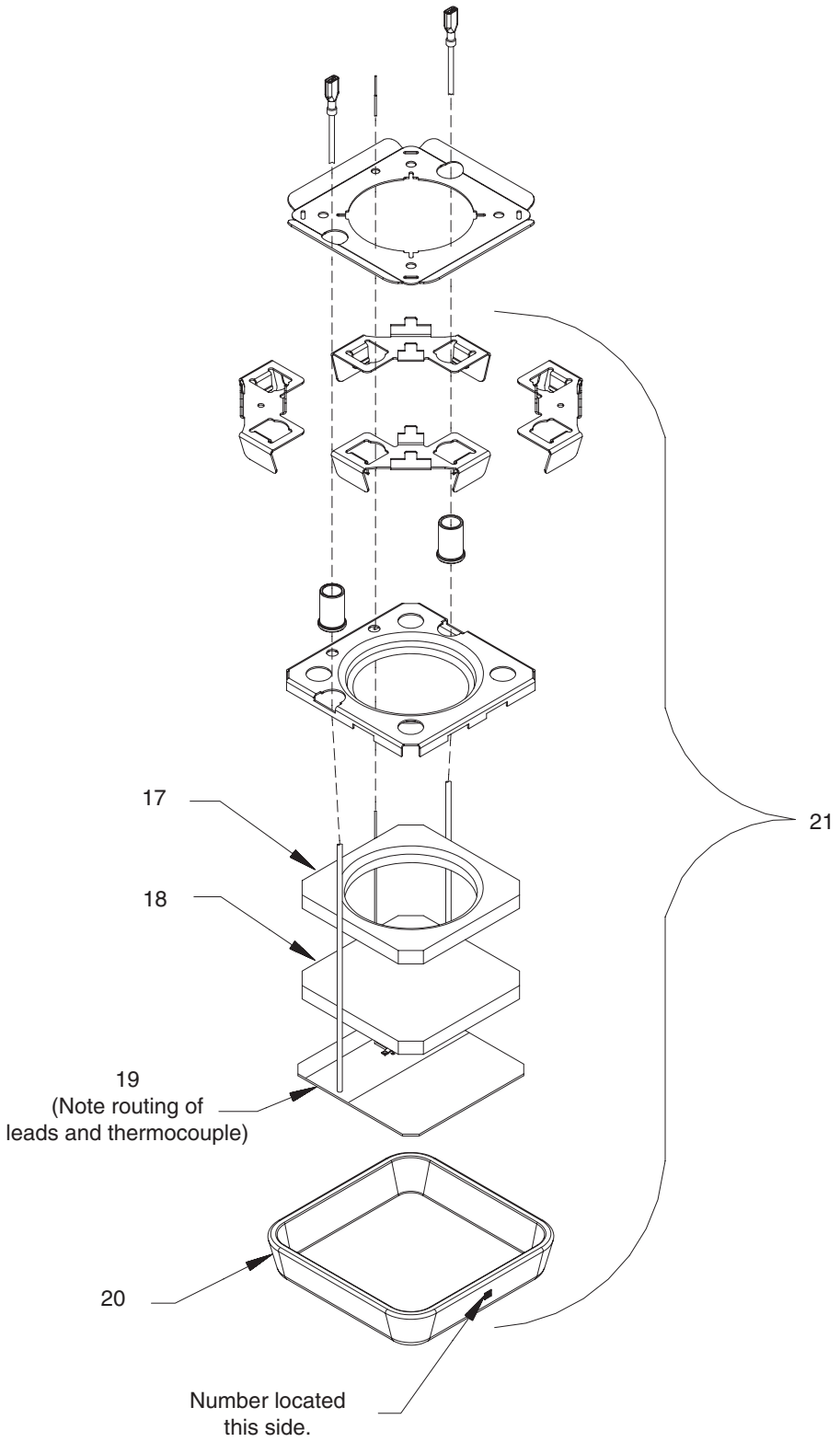

4x4 Exploded View - Top Plate

EXPLODED VIEWS

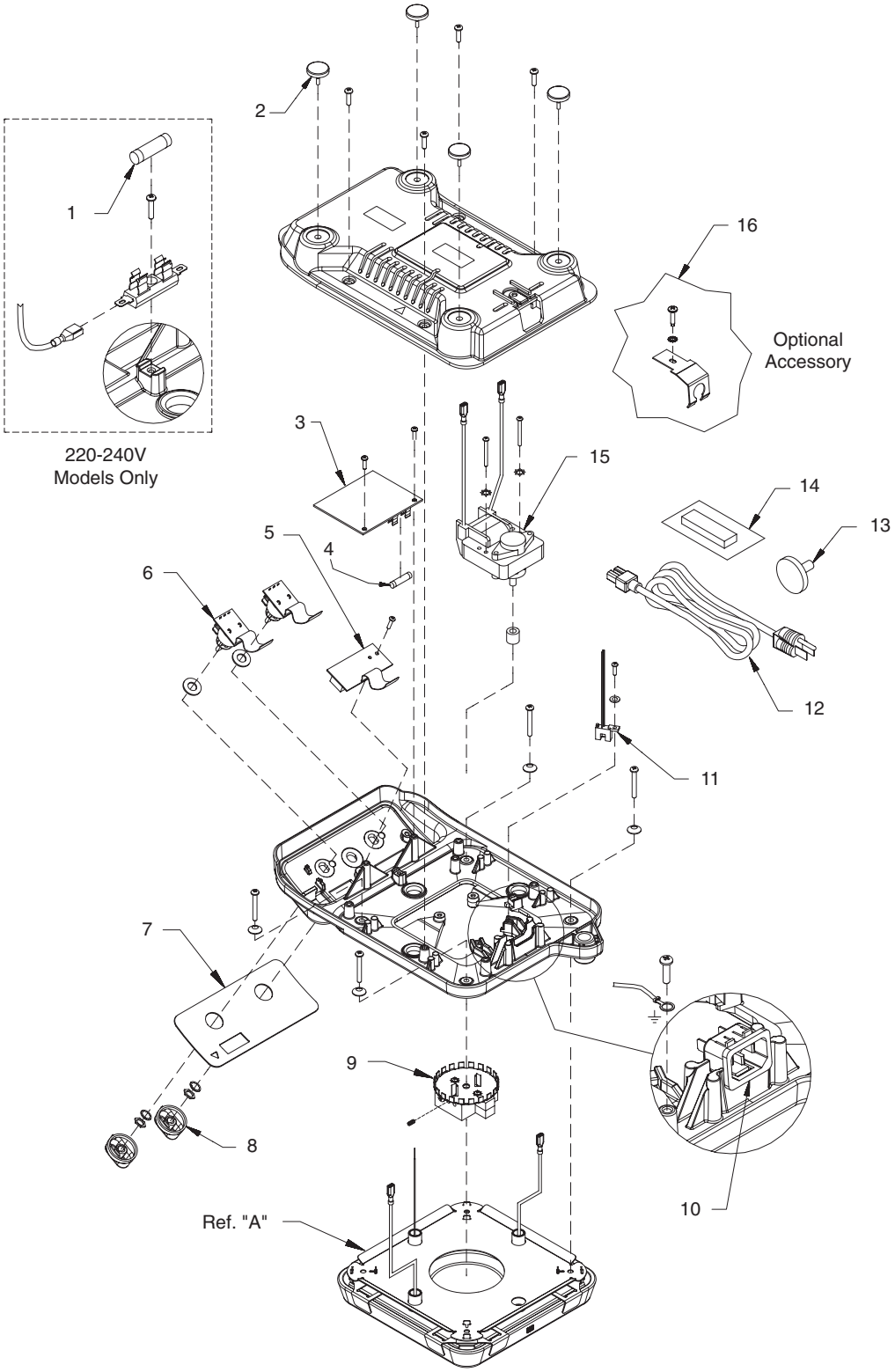

7x7 Exploded View

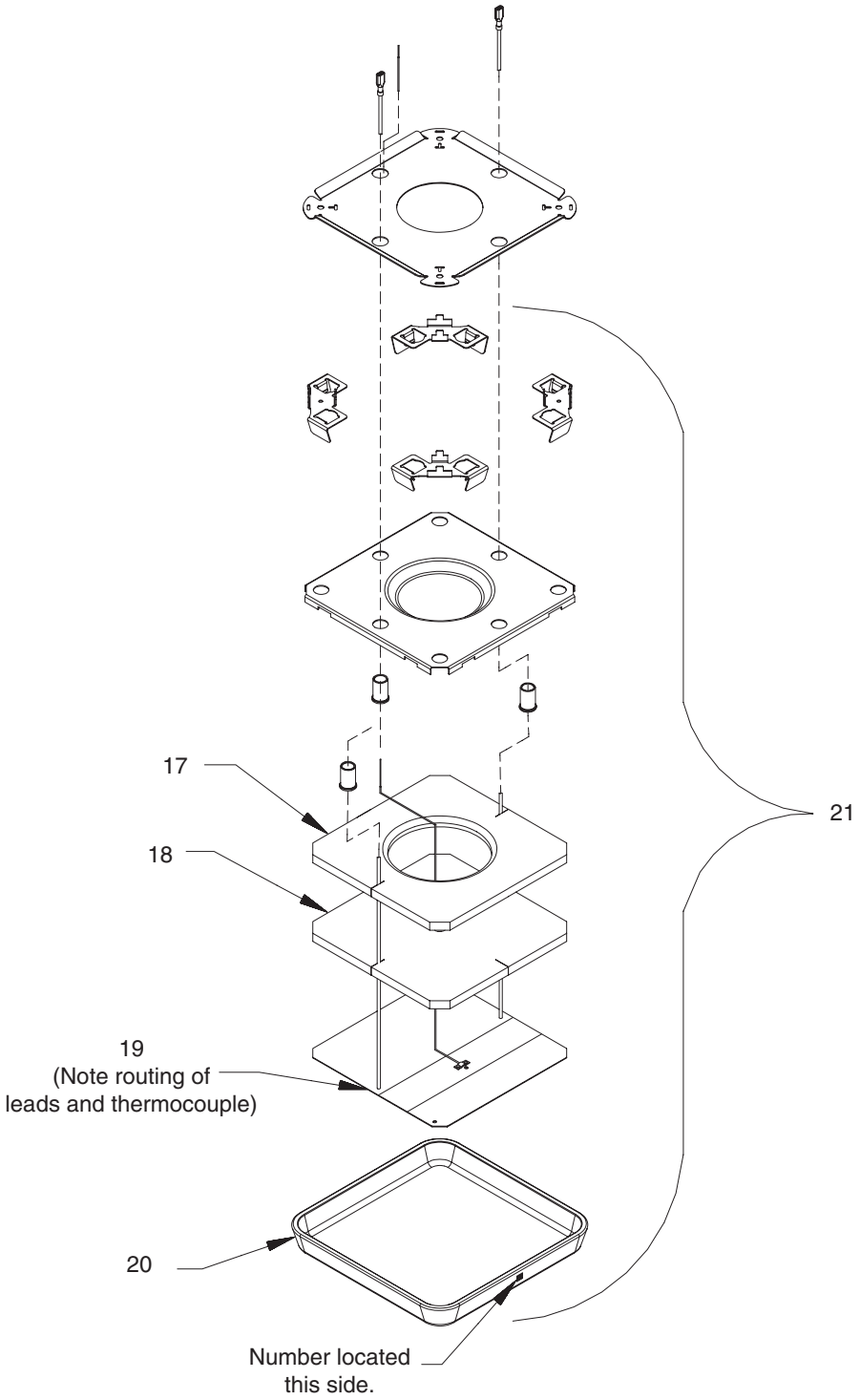

7x7 Exploded View - Top Plate

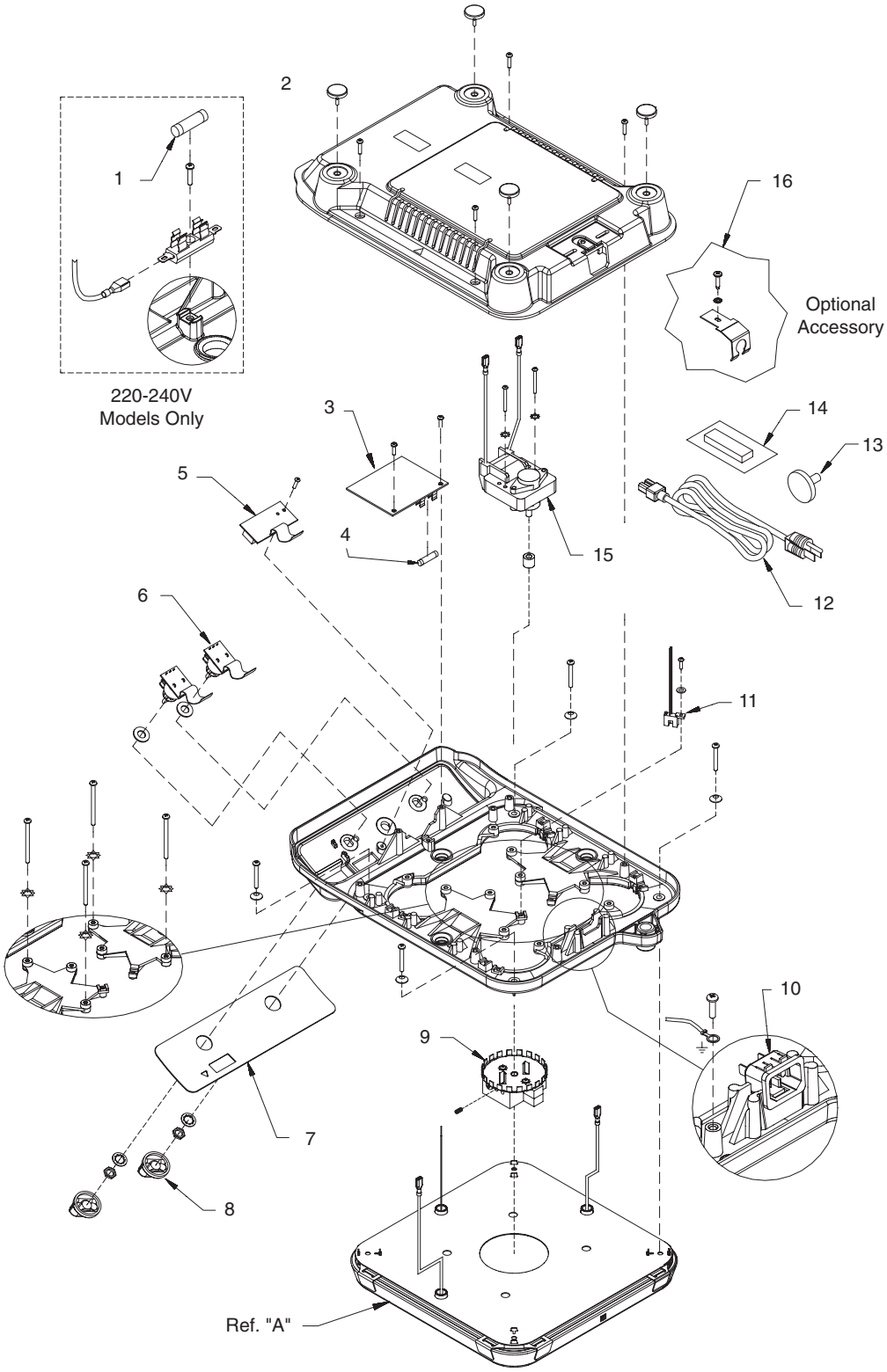

10x10 Exploded View

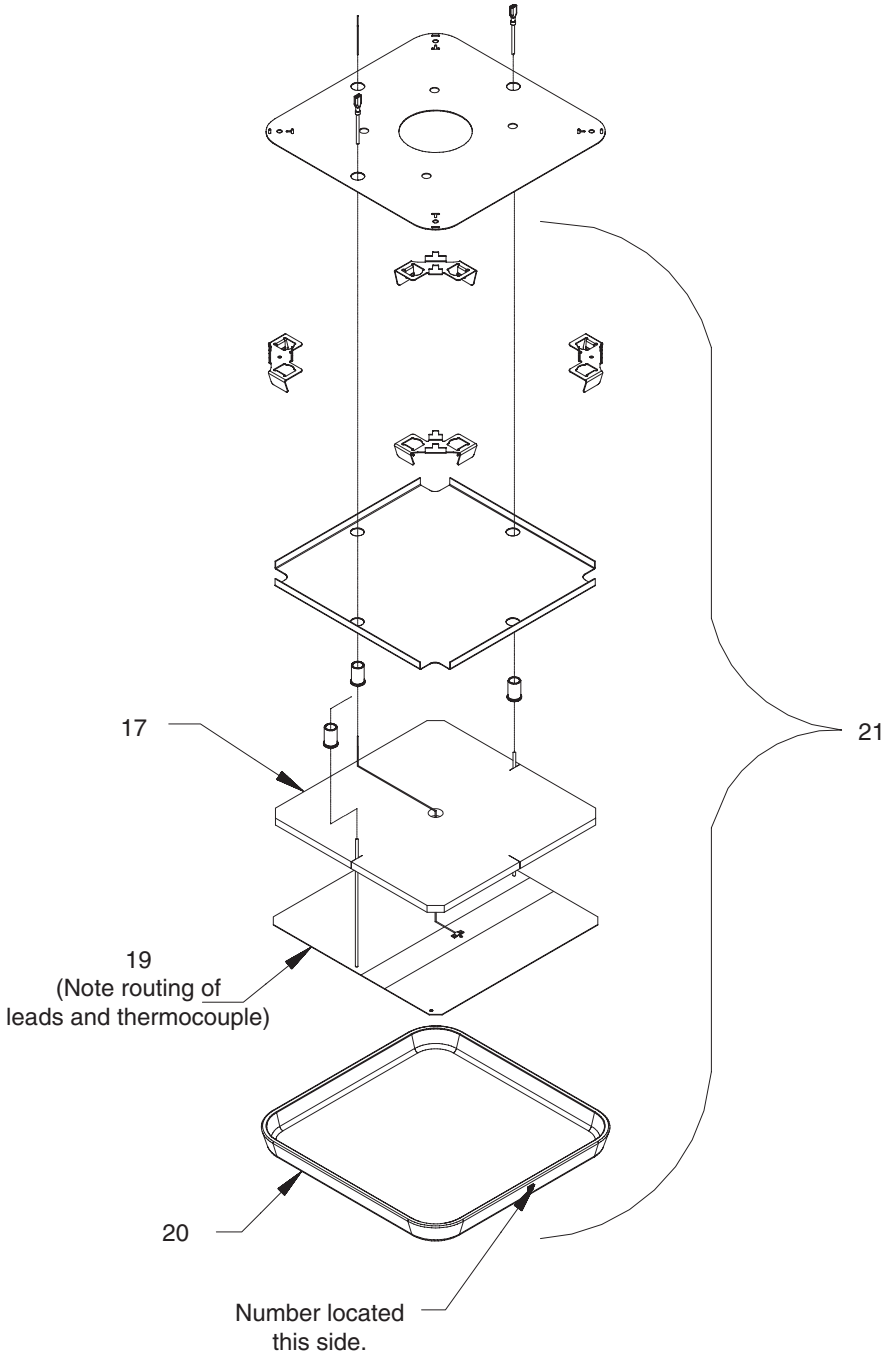

10x10 Exploded View - Top Plate

Wiring Diagram

COMPONENT CHART

	(4x4)	(7x7)	(10x10)
C1	CEX373	CEX373	CEX373
EL1 (100V)	ELX42	ELX45	ELX48
EL1 (120V)	ELX41	ELX44	ELX47
EL1 (220-240V)	ELX43	ELX46	ELX49
MT1 (100-120V)	MT1313X1	MT1313X1	MT1316X1
MT1 (220-240V)	MT1313X2	MT1313X2	MT1316X2
PC1 (100-120V)	PCX83	PCX83	PCX83
PC1 (220-240V)	PCX89	PCX89	PCX89
PC2	PC1313X2	PC1313X2	PC1313X2
PC3	PC1313X1	PC1313X1	PC1313X1
PC4	PC1313X1	PC1313X1	PC1313X1
S1	SC1313X1	SC1313X1	SC1313X1

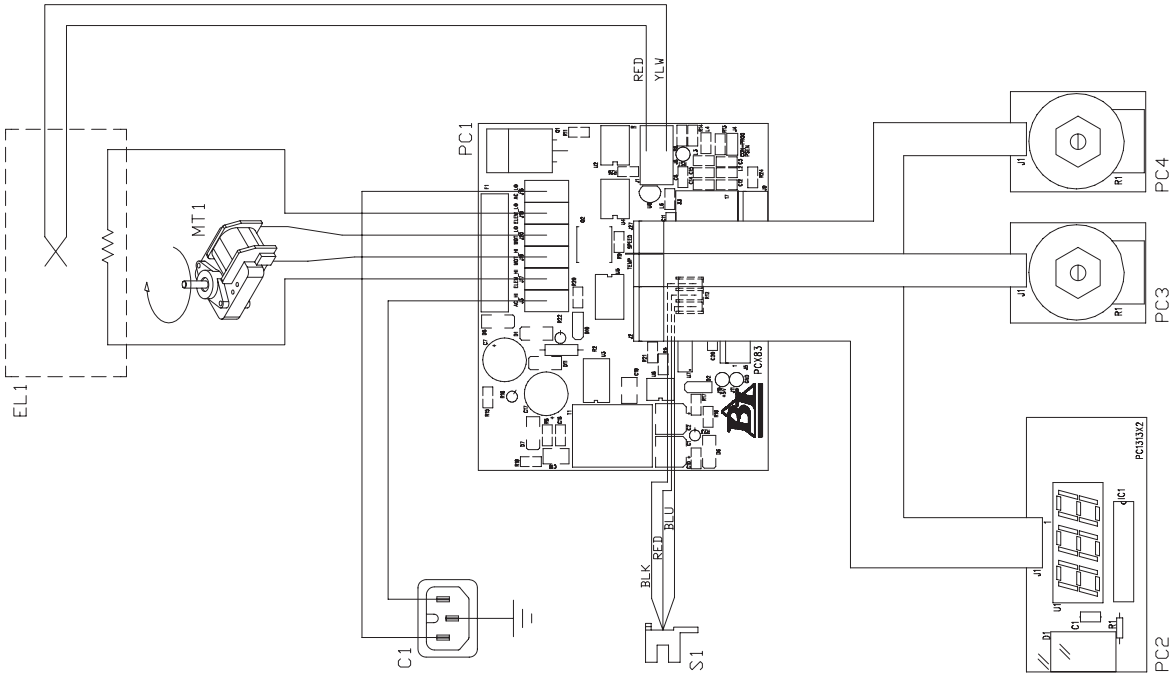

Replacement Parts

Key	4x4 Part No.	7x7 Part No.	10x10 Part No.	Description
1	261575	261575	261575	PC Board Fuse - 220-240V
2	FTX34	FTX34	FTX34	Foot (4)
3	PCX83	PCX83	PC1316X1	Control Board - 100V, 120V
3	PCX89	PCX89	PC1316X2	Control Board - 220-240V
4	266058	266058	266058	PC Board Fuse - 100V, 120V
5	PC1313X2	PC1313X2	PC1313X2	Display Board
6	PC1313X1	PC1313X1	PC1313X1	Speed/Heat Adjustment Board (2)
7	DLX276	DLX279	DLX282	Dial Plate
8	KBX103	KBX103	KBX104	Knob (2)
9	MG1310X1	MG1313X1	MG1313X1	Bar Magnet Assembly
10	CEX373	CEX373	CEX373	Power Entry Module
11	SC1310X1	SC1313X1	SC1313X1	Speed Sensor
12	CRX106	CRX106	CRX106	Cord Set - 100 V, 120V
12	CRX107	CRX107	CRX107	Cord Set - 220-240V
13	KBX78	KBX78	KBX78	Knob
14	ZSX122A	ZSX65A	ZSX65A	Stir Bar
15	MT1313X1	MT1313X1	MT1316X1	Motor - 120V, 100V
15	MT1313X2	MT1313X2	MT1316X2	Motor - 220-240V
16	AY1313X1	AY1313X1	AY1313X1	Retaining Clip - 100V, 120V
16	AY1313X2	AY1313X2	AY1313X2	Retaining Clip - 220-240V
17	JNX33	JNX35	---	Lower Insulation
18	JNX34	JNX36	JNX38	Upper Insulation
19	ELX41	ELX44	ELX47	Heating Element - 120V - w/thermocouple
19	ELX42	ELX45	ELX48	Heating Element - 100V - w/thermocouple
19	ELX43	ELX46	ELX49	Heating Element - 220-240V - w/thermocouple
20	540-0033	710-0117	719-0073	Ceramic Top
21	EL1310X1	EL1313X1	EL1316X1	Hot Plate Top Assembly - 120V
21	EL1310X2	EL1313X2	EL1316X2	Hot Plate Top Assembly - 100V
21	EL1310X3	EL1313X3	EL1316X3	Hot Plate Top Assembly - 220-240V

Accessories

Part No.	Description
711S	Non-Mercury Thermometer 20 to 100°C Range
647-1S	Non-Mercury Thermometer 0 to 110°C Range
1007-3BLS	Non-Mercury Thermometer -1 to 201°C Range
615-3SC	Mercury Teflon Coated Thermometer -10 to 200°C Range
260CW-3BLS	Teflon Coated, Non-Mercury Thermometer -10°C to 260°C Range
ERT605	Waterproof Digital Thermometer -50 to 280°C
7077	Thermometer Clamp
7068	90° Clamp Holder
1000-2	12” Aluminum Rod
7078	Large Clamp
7079	Small Clamp (up to 1/2”)

Ordering Procedures

Please refer to the Specification Plate for the complete model number, serial number, and series number when requesting service, replacement parts or in any correspondence concerning this unit.

All parts listed herein may be ordered from the Barnstead International dealer from whom you purchased this unit or can be obtained promptly from the factory. When service or replacement parts are needed we ask that you check first with your dealer. If the dealer cannot handle your request, then contact our Customer Service Department at 563-556-2241 or 800-553-0039.

Prior to returning any materials to Barnstead International, please contact our Customer Service Department for a “Return Materials Authorization” number (RMA). Material returned without an RMA number will be refused.

Two Year “Bumper to Bumper” Warranty

Barnstead International (“BARNSTEAD”) warrants that a product manufactured by Barnstead shall be free of defects in materials and workmanship for two (2) years from the first to occur of (i) the date the product is sold by BARNSTEAD or (ii) the date the product is purchased by the original retail customer (the “Commencement Date”). Except as expressly stated above, BARNSTEAD MAKES NO OTHER WARRANTY, EXPRESSED OR IMPLIED, WITH RESPECT TO THE PRODUCTS AND EXPRESSLY DISCLAIMS ANY AND ALL WARRANTIES, INCLUDING BUT NOT LIMITED TO, WARRANTIES OF DESIGN, MERCHANT ABILITY AND FITNESS FOR A PARTICULAR PURPOSE.

An authorized representative of BARNSTEAD must perform all warranty inspections. In the event of a defect covered by BARNSTEAD’s warranty, BARNSTEAD shall, as its sole obligation and exclusive remedy, provide free replacement parts to remedy the defective product. In addition, for products sold by BARNSTEAD within the continental United States or Canada, BARNSTEAD shall provide provide free labor to repair the products with the replacement parts, but only for a period of ninety (90) days from the Commencement Date.

BARNSTEAD’s warranty provided hereunder shall be null and void and without further force or effect if there is any (i) repair made to the product by a party other than BARNSTEAD or its duly authorized service representative, (ii) misuse (including use inconsistent with written operating instructions for the product), mishandling, contamination, overheating, modification or alteration of the product by any customer or third party or (iii) use of replacement parts that are obtained from a party who is not an authorized dealer of BARNSTEAD.

Heating elements, because of their susceptibility to overheating and contamination, must be returned to the BARNSTEAD factory and if, upon inspection, it is concluded that failure is due to factors other than excessive high temperature or contamination, BARNSTEAD will provide warranty replacement. As a condition to the return of any product, or any constituent part thereof, to BARNSTEAD’s factory, it shall be sent prepaid and a prior written authorization from BARNSTEAD assigning a Return Materials Number to the product or part shall be obtained.

IN NO EVENT SHALL BARNSTEAD BE LIABLE TO ANY PARTY FOR ANY DIRECT, INDIRECT, SPECIAL, INCIDENTAL, OR CONSEQUENTIAL DAMAGES, OR FOR ANY DAMAGES RESULTING FROM LOSS OF USE OR PROFITS, ANTICIPATED OR OTHERWISE, ARISING OUT OF OR IN CONNECTION WITH THE SALE, USE OR PERFORMANCE OF ANY PRODUCTS, WHETHER SUCH CLAIM IS BASED ON CONTRACT, TORT (INCLUDING NEGLIGENCE), ANY THEORY OF STRICT LIABILITY OR REGULATORY ACTION.

The name of the authorized Barnstead International dealer nearest you may be obtained by calling 1-800-446-6060 (563-556-2241) or writing to:

BarnsteadInternational
an Apogent company
Your Lab Starts Here

ISO 9001 REGISTERED

2555 Kerper Boulevard
P.O. Box 797
Dubuque, Iowa 52001-0797
Phone: 563-556-2241 or 800-553-0039
Fax: 563-589-0516
E-mail: mkt@barnstead.com
www.barnstead.com