SARTORIUS EB/FC-EX Series

Industrial Weighing Technology

Electronic Precision Scales

Servicing Explosion-Protected Scales of the EB-EX and FC-X Series with spare part lists

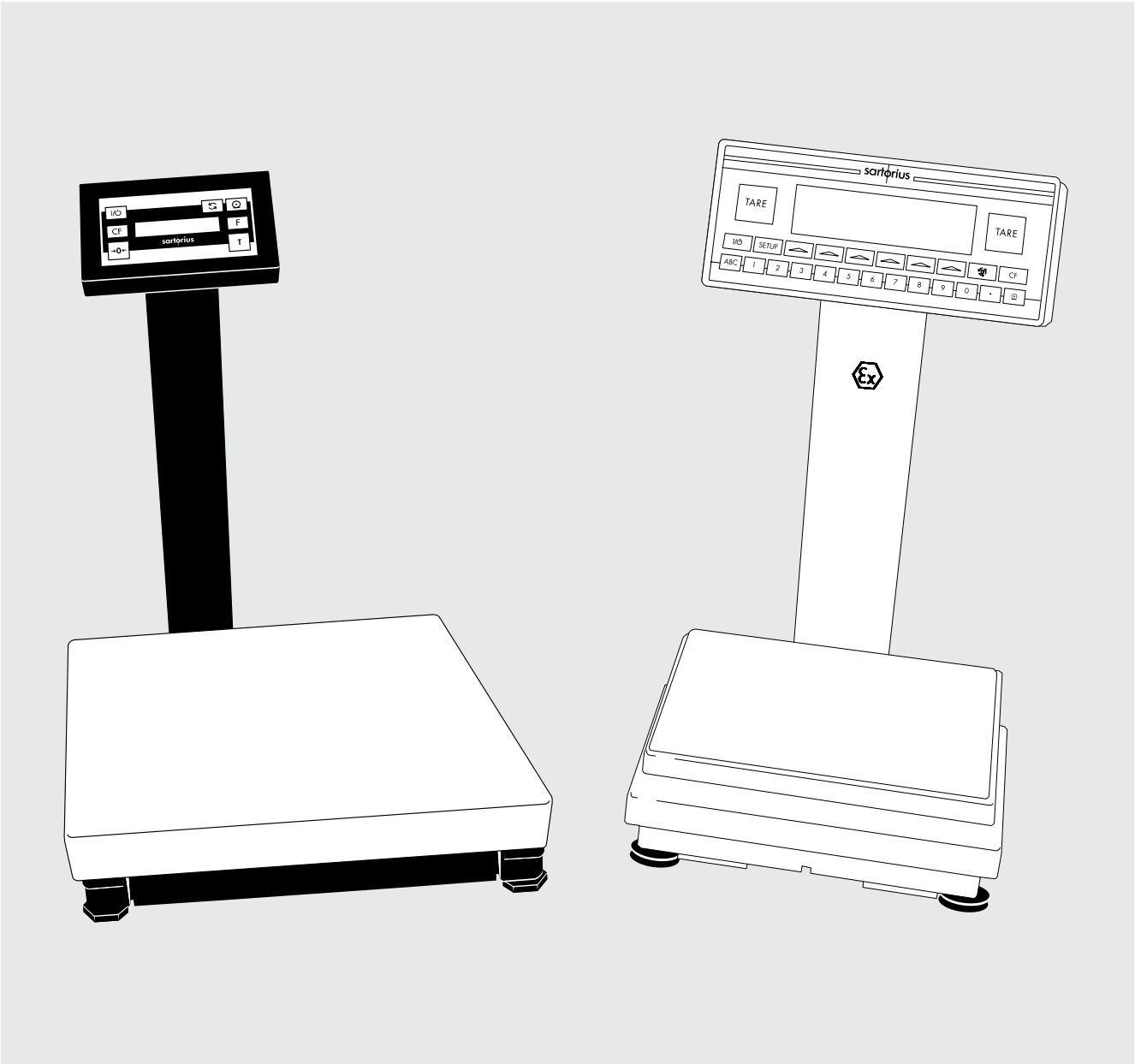

Sartorius AG, Weighing Technology

sartorius

	Page
Modification of the 6740-63SBI-BPI Mode Adapter	4
Procedure for activating BPI Mode on the New EB/FC-Ex Models	4
Special Features of the EB-EX Models	5
Weighing Cell	5
Special Cable	5
Pin Assignment Chart: Scales, Zener Barrier	6
Adjustment and Repair Work	7
Switching Over the SBI-BPI Mode	7
Display Unit	7
Explosion-protected Power Supply (YPS03…)	7
Special Features of the FC-EX Models	8
Weighing Cell	8
Adjustment and Repair Work	8
Switching Over the SBI-BPI Mode	8
Motorized Calibration Weight	9
Display Unit	9
Explosion-protected Power Supply (YPS02…)	9
Zener Barrier (YDI02-Z, YDI03-Z)	9
Cabling Diagram for Service (PC, PSION)	10
Circuit Diagram: Explosion-protected Power Supply (YPS02...)	11
Wiring Diagram (FC-EX): DC Cable (blue)	12
Circuit Diagram: Zener Barrier (YDI01-Z)	13
Circuit Diagram: Zener Barrier (YDI02-Z)	14
Circuit Diagram: Zener Barrier (YDI03-Z)	15
Spare part list EB-Ex	16
Spare part list FC-Ex	17-18

Model EB/FC-EX

Important Note!

Servicing of explosion-protected scales may only be carried out by technicians certified by Sartorius AG to work on explosion-protected equipment. Afterwards, they must seal the scale with their personalized EX control seal!

For the EB/FC-EX models, do not attempt to make any repairs at the component level, but rather replace the entire subassembly. After replacing the subassembly, PCB, display unit, internal calibration weight (or measuring spring on the EB models), you must not conduct any high-voltage tests since the potential of the scales is not zero. A high-voltage test would automatically destroy all the electronics.

Modification of the 6740-63SBI-BPI Mode Adapter

- Cut the track (foil side) routed to pin 6 (see illustration) at the far end for some mm
- Remove the insulation from the conductor (far end)
- Solder on a micro switch (see illustration)

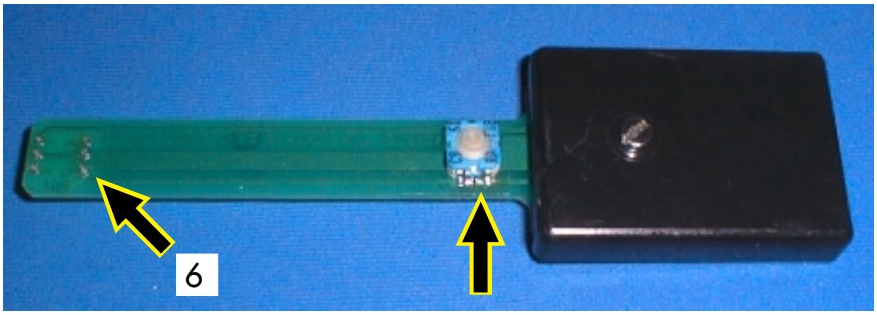

Bpia.EPS

The micro switches are available in any electronics or hobby shop.

Note:

The modified adapter can be used for all standard MC1 models (PMA EA/EB, CarMix and their explosion-protected versions).

Important note!

Any modifications and repairs to explosion-protected scales may only be carried out by technicians certified by Sartorius AG to work on explosion-protected equipment.

Procedure for activating BPI Mode on the New EB/FC-Ex Models

- Turn scale off
- Plug in mode adapter (refer to service manual EX)
- Turn scale on
- When the weight is displayed, hold down the button on the mode adapter for approx. 3 seconds (the weight will disappear briefly during this time)
- Release button
- Disconnect the mode adapter
- Turn the scale off, then back on again

Note:

Follow the same procedure to activate BPI mode on other scale models (PMA, EA/EB, CarMix and their explosion-protected versions). Don`t forget to perform "CLOSE" after finishing software adjustments!

Special Features of the EB-EX Models

Weighing Cell

- To protect the mechanical parts and prevent moisture intrusion, apply black sealing compound to the measuring spring in the area of the strain gauge
- The RS-232 interface (round female connector) must be operated via a Zener barrier. A special cable may **only** ever be used to connect a PC or printer directly to the round female connector when carrying out tests and performing repairs, (see illustrations below and pin assignment chart on page 6)

Special Cable

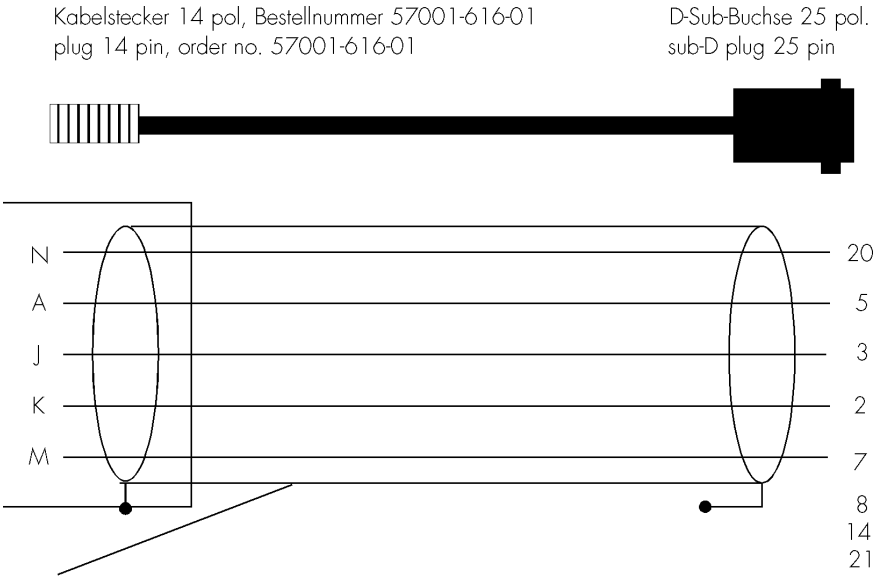

Schirm shield	Signal signal	Pin-Belegung des runden Kabelsteckers 14 pol connection plan of round plug 14 pin	Pin-Belegung der 25 pol. D-Sub-Buchse connection plan of sub-D plug 25 pin
	DTR	N	20
	CTS	A	5
	RxD	J	3
	TxD	K	2
	GND	M	7, 8, 14, 21

Spez.kab_1.EPS

Pin Assignment Chart: Scales, Zener Barrier

Scales:

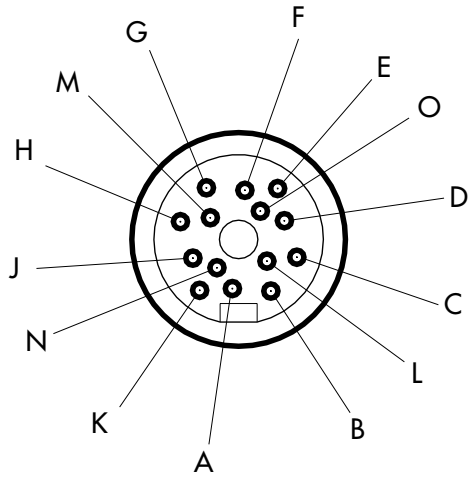

Rund14_b.EPS

Zener Barrier:
YDI02-Z, YDI03-Z

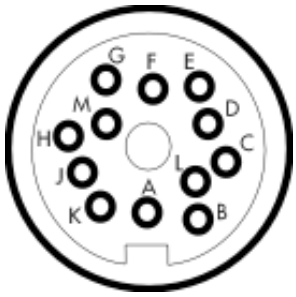

Rund12_p.EPS

14-pin Round connector	12-pin Barrier	Signal RS232 (SBI and xBPI)	Signal RS485 [1] (xBPI)
G	A	Controller output »greater«	Controller output "greater"
K	B	Transmit data (TxD)	RxD – TxD – N
J	C	Receive data (RxD)	RxD – TxD – P
N	D	Data Terminal Ready (DTR)	
M	E	Signal GND	Signal GND
F	G	Controller output "lower"	Controller output "lower"
A	H	Clear to Send (CTS)	
E	J	Controller output "equal"	Controller output "equal"
O	–	Universal switch	Universal switch
D	L	Controller output "set"	Controller output "set"

Connect shielding with low-resistance to connector housing

[1] RS485 interface available on request

Adjustment and Repair Work

When performing adjustment and repair work, refer to the Service Manual for EA/EB models.

- Any greater deviation can only be adjusted using the SARTOCAS or PSION service software. In order to do so, the scale must be set to the BPI mode

Switching Over the SBI-BPI Mode

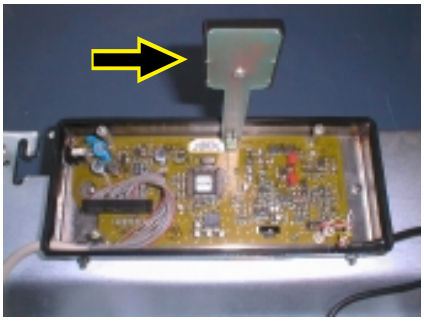

Bpi.JPG + Pfeil-g.EPS

- When performing repairs or when the calibration weight lies outside the tolerance of ±2%, you can switch over the SBI-BPI mode using the 6740-63 mode adapter (see illustration on the left).
- Procedure see page 4

Display Unit

- The special keypad is shielded from static electricity
- The data interface is closed (25-pin D-Sub), no printer or PC may be connected in explosion-protected areas
- It is **not** possible to operate the RS-232 data interface (round female connector on the weighing cell) and the 25-contact round female connector on the display unit simultaneously
- Customized lengths for cables between the display unit and weighing cell should only be produced by the Fast Factory

Explosion-protected Power Supply (YPS03...)

- Flame-proof aluminum housing
- When opening: do not damage the sealing ring or the polished surface of the power supply cover (avoid tearing and scratching)
- You must always replace any defective parts; otherwise the scale is no longer guaranteed to be explosion protected

Important note!

If any defect to the PCB should occur, replace the entire explosion-protected power supply; the new PCB can only be fit properly at the main factory.

- When assembling the power supply, insert the PCB into the grooves of the Pertinax plates (spacer plates)
- Reinsert the power supply cover by turning it back and forth. Lubricate the contact surface with a **small amount** of grease
- Tighten the screws to the cover by hand
- Customized cable lengths (power supply-to-scale up to 20 meters) should only be ordered from the Fast Factory
- The connecting cable must be glue with **Loctite 270**
- After replacing the connecting cables, tighten the cable glands to a torque of 20 Nm (± 5 Nm)

Important note!

After replacing the connecting cables, you must always conduct a high-voltage test (see Test Instructions WMS-014-02 for explosion-protected scales).

The standard test procedures for explosion-protected scales apply.

Special Features of the FC-EX Models

Weighing Cell

– The RS-232 interface (optionally RS-485) can only be operated via a Zener barrier. For carrying out tests and performing repairs, a modified cable can be used to connect a PC or printer directly to the round female connector (see page 5)

Adjustment and Repair Work

Refer to the Service Manual for FB/FC models when performing adjustment and repair work Service Manual for FB/FC models.

– Adjustments that lie outside the tolerance of ±2% for span adjustment, internal calibration weight and linearity can be corrected directly on the scale without using the service software (see Service Manual for FB/FC Models)
– When these values lie outside the tolerance or when performing repairs, you must use the SARTOCAS or PSION service software. In order to do so, the scale must be set to the BPI mode

  1. with the mode adapter (6740-63) **or**
  2. using the XBPI mode (menu code **552**) on the scale

  In both cases, *Err30* will appear in the display after pressing the ⊙ key. Re-activate the standard SBI mode by setting the menu code to **551**.

Switching Over the SBI-BPI Mode

In order to re-program a scale processor when doing service work, the scale must be set to the BPI mode using the mode adapter

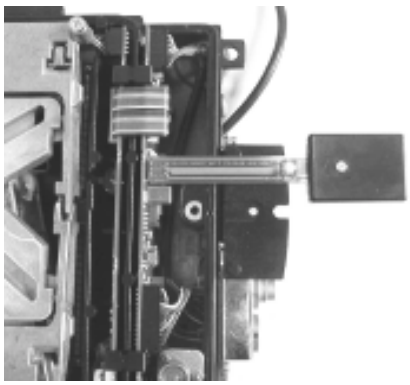

Sbi_bpi2.EPS

– For switching over the SBI-BPI mode, you must remove the display unit holder and the upper housing of the scale
– Plug in the mode adapters (see illustration on the left)
– Procedure for switching over the SBI-BPI mode, see page 4

Important note!

After performing repair work, run the "Close" function to active the SBI mode. Afterwards, you must always turn the scale off and then back on again.

Motorized Calibration Weight

– Do not turn the sprocket belt of the motorized calibration weight by hand. The motor for the calibration weight is a piezoelectric motor

Display Unit

– Only use the original explosion-protected keypad (shielded from static electricity)
– Customized lengths for cable between the display unit and weighing cell should only be ordered from the Fast Factory

Important note!

After replacing a subassembly or cable, you must not conduct any high-voltage tests since the potential of the Zener barrier is not zero.

Explosion-protected Power Supply (YPS02...)

– Flame-proof aluminum housing
– After opening, do not damage the sealing ring or the polished surface of the power supply cover (avoid scratching)
– You must **always replace** a defective cover; otherwise the scale is no longer guaranteed to be explosion-protected
– If a defect occurs, replace the entire PCB
– Reinsert the power supply cover by turning it back and forth. Lubricate the contact surface with **some grease**
– Tighten the screws to the cover by hand
– Customized lengths for cable between the display unit and weighing cell should be ordered through the Fast Factory (Power supply-to-scale up to 20 meters)
– The connecting cable must be glue with **Loctite 270**
– After replacing the connecting cables, tighten the cable glands to a torque of 20 Nm (± 5 Nm)

Important note!

After replacing the connecting cables, you must always conduct a high-voltage test (see Test Instructions for explosion-protected scales).

The standard test procedures for explosion-protected scales apply.

Zener Barrier (YDI02-Z, YDI03-Z)

Important note!

After replacing a subassembly or cable, you must not conduct any high-voltage tests since the potential of the Zener barrier is not zero.

Anschlußplan / connecting cable plan

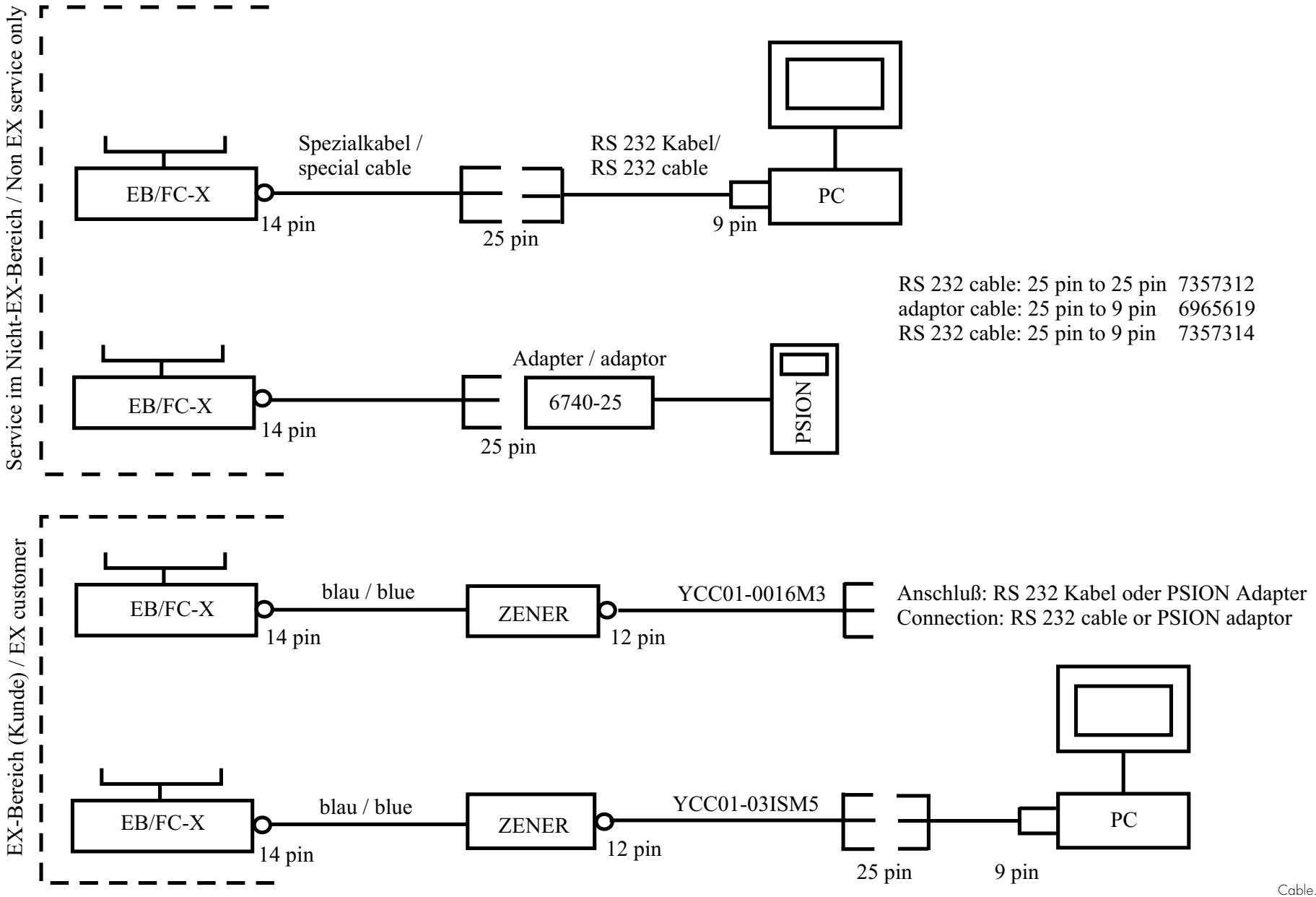

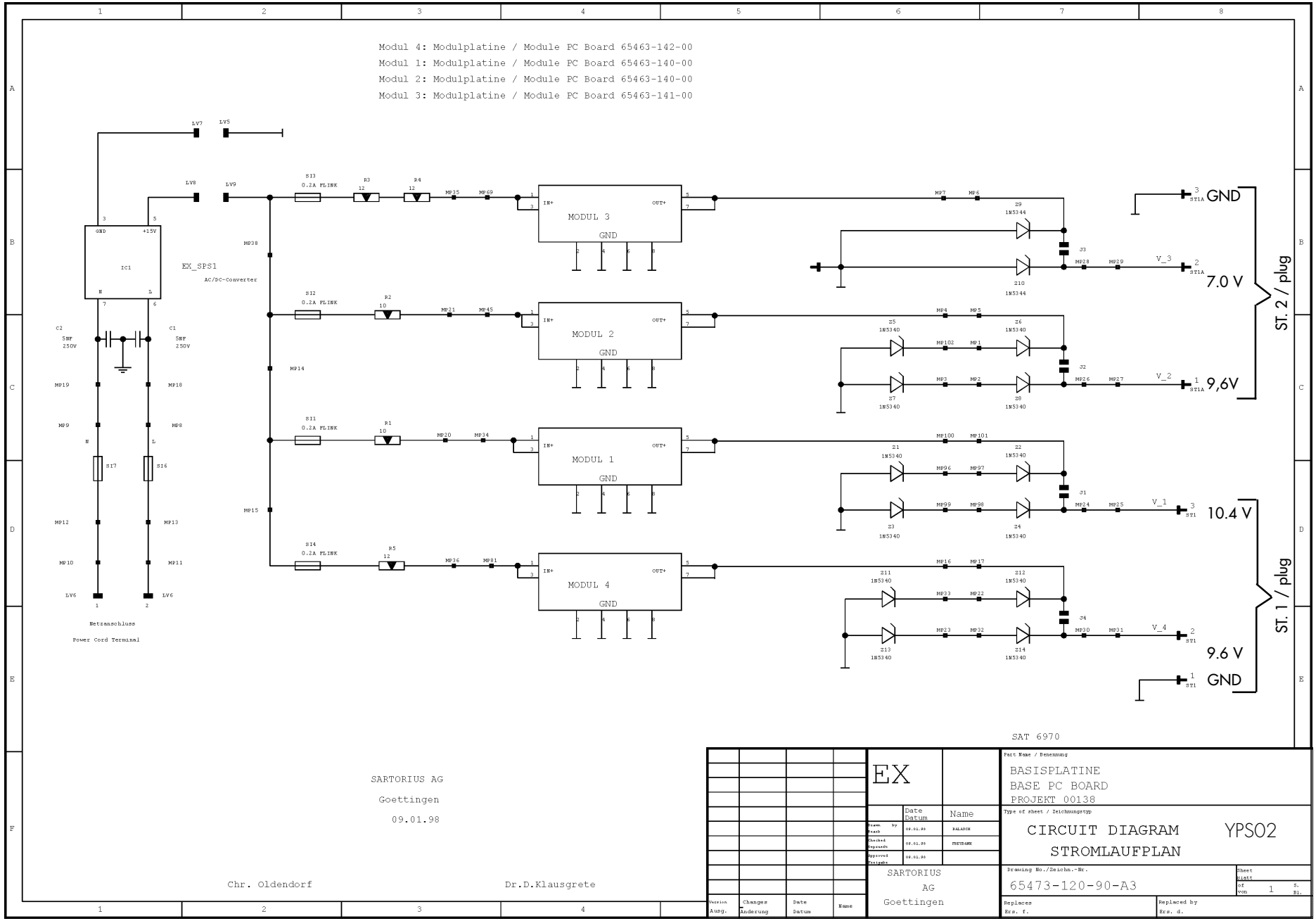
Modul 4: Modulplatine / Module PC Board 65463-142-00
Modul 1: Modulplatine / Module PC Board 65463-140-00
Modul 2: Modulplatine / Module PC Board 65463-140-00
Modul 3: Modulplatine / Module PC Board 65463-141-00
EX_SPS1
AC/DC-Converter
MODUL 3
MODUL 2
MODUL 1
MODUL 4
GND
Netzanschluss
Power Cord Terminal
ST. 2 / plug
ST. 1 / plug
GND
7.0 V
9,6V
10.4 V
9.6 V
GND
SAT 6970
SARTORIUS AG
Goettingen
09.01.98
Chr. Oldendorf
Dr.D.Klausgrete
EX
BASISPLATINE
BASE PC BOARD
PROJEKT 00138
CIRCUIT DIAGRAM
STROMLAUFPLAN
YPS02
65473-120-90-A3
SARTORIUS AG Goettingen

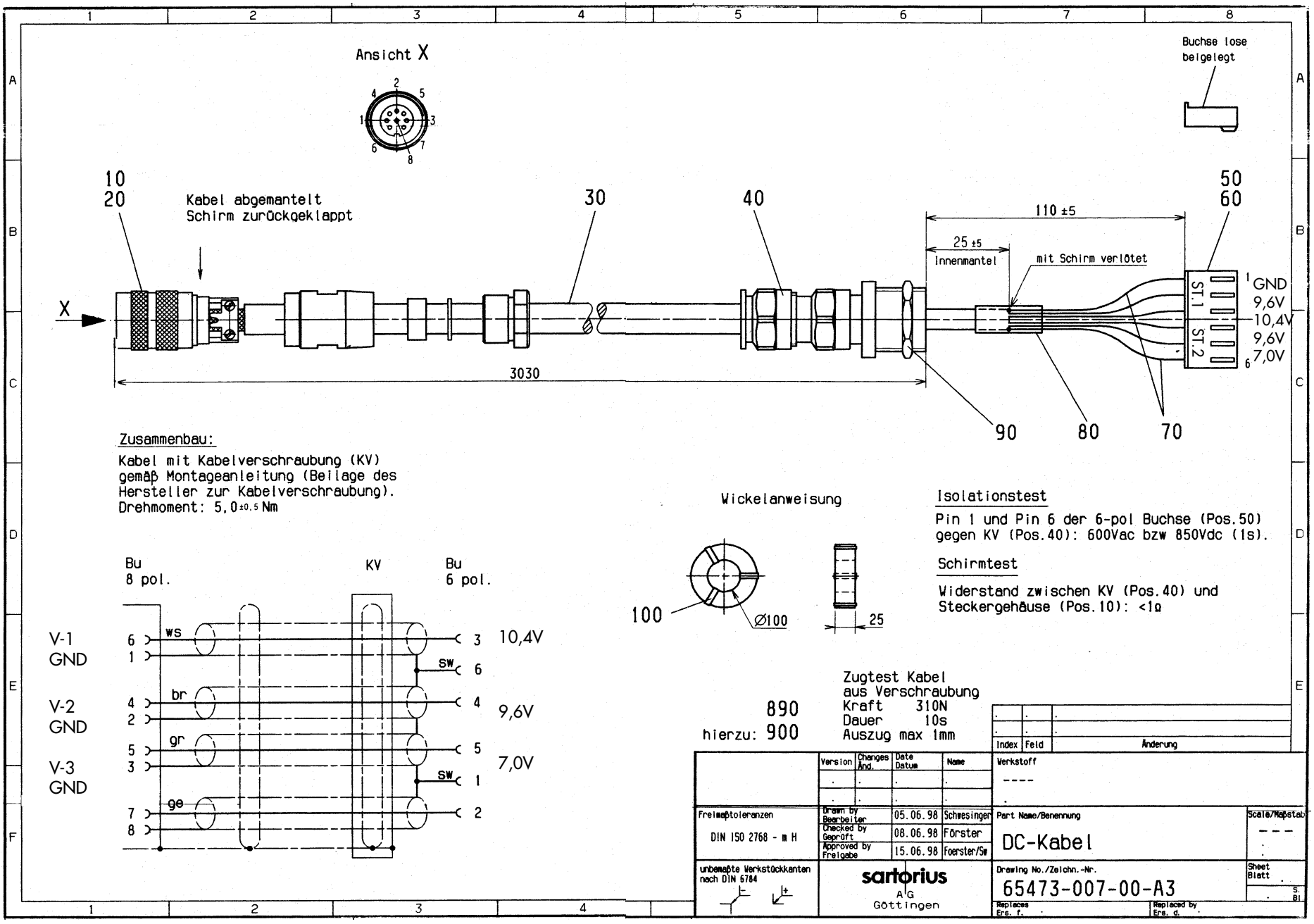
Ansicht X
Buchse lose beigelegt
10
20
Kabel abgemantelt
Schirm zurückgeklappt
30
40
50
60
110 ±5
25 ±5
Innenmantel
mit Schirm verlötet
X
ST.1
ST.2
1 GND
9,6V
10,4V
9,6V
6 7,0V
3030
90
80
70
Zusammenbau:
Kabel mit Kabelverschraubung (KV) gemäß Montageanleitung (Beilage des Hersteller zur Kabelverschraubung).
Drehmoment: 5,0±0.5 Nm
Wickelanweisung
100
Ø100
25
Isolationstest
Pin 1 und Pin 6 der 6-pol Buchse (Pos.50) gegen KV (Pos.40): 600Vac bzw 850Vdc (1s).
Schirmtest
Widerstand zwischen KV (Pos.40) und Steckergehäuse (Pos.10): <1Ω
Bu 8 pol.
KV
Bu 6 pol.
V-1 GND
V-2 GND
V-3 GND
6 ws 3 10,4V
1 SW 6
4 br 4 9,6V
2
5 gr 5 7,0V
3 SW 1
7 ge 2
8
890
hierzu: 900
Zugtest Kabel aus Verschraubung
Kraft 310N
Dauer 10s
Auszug max 1mm
Index Feld Änderung
Version Changes And. Date Datum Name
Werkstoff ----
Freimaßtoleranzen DIN ISO 2768 - m H
Drawn by Bearbeiter 05.06.98 Schwesinger
Checked by Geprüft 08.06.98 Förster
Approved by Freigabe 15.06.98 Foerster/Sw
Part Name/Benennung DC-Kabel
Scale/Maßstab ---
unbemaßte Werkstückkanten nach DIN 6784
sartorius AG Göttingen
Drawing No./Zeichn.-Nr. 65473-007-00-A3
Sheet Blatt S. 81
Replaces Ers. f.
Replaced by Ers. d.

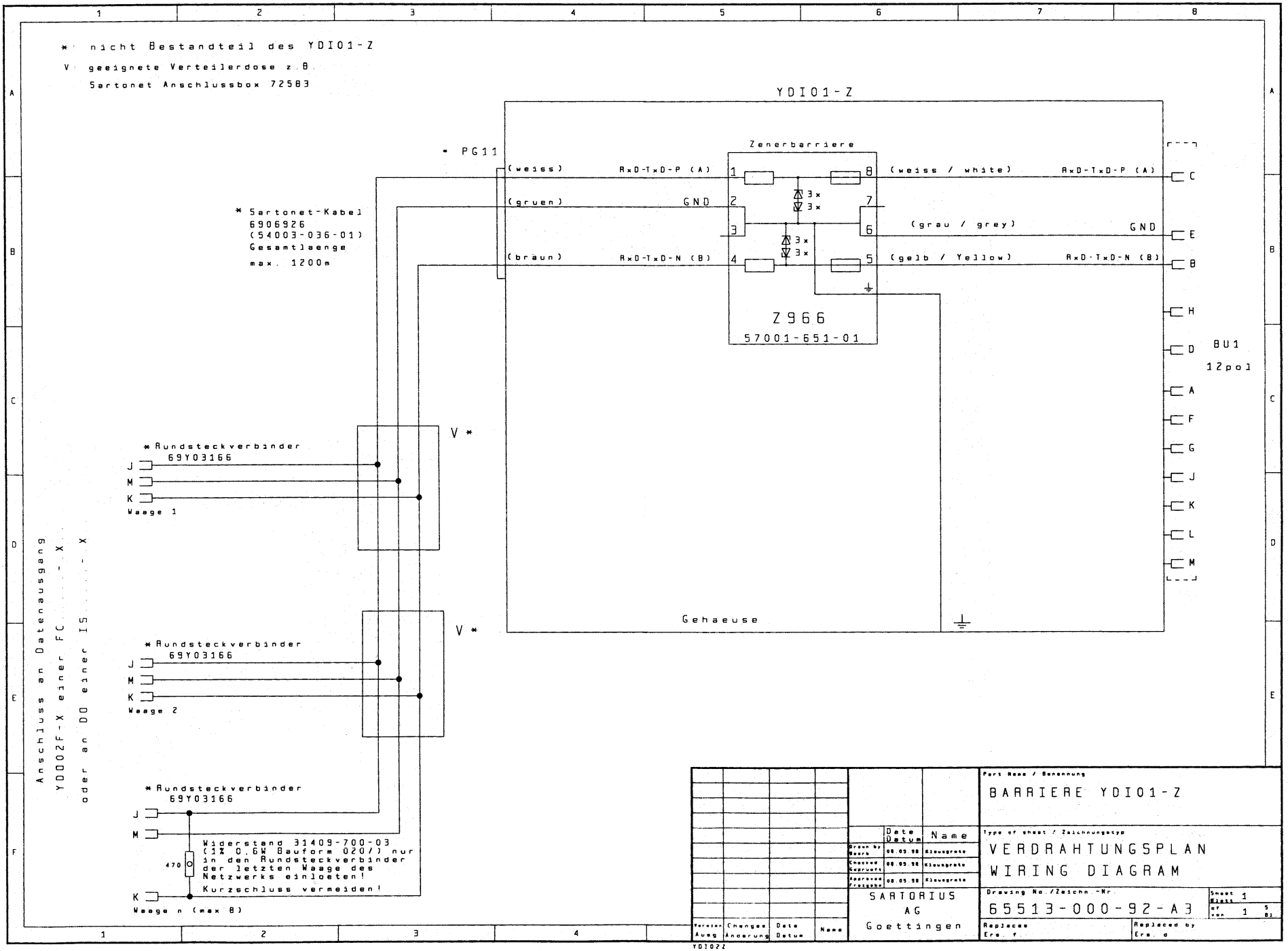
* nicht Bestandteil des YDI01-Z
V geeignete Verteilerdose z.B.
Sartonet Anschlussbox 72583
YDI01-Z
* PG11
Zenerbarriere
(weiss)
RxD-TxD-P (A)
(gruen)
GND
(braun)
RxD-TxD-N (B)
(weiss / white)
(grau / grey)
(gelb / Yellow)
3x
Z966
57001-651-01
* Sartonet-Kabel
6906926
(54003-036-01)
Gesamtlaenge
max. 1200m
BU1
12pol
* Rundsteckverbinder
69Y03166
Waage 1
Waage 2
Waage n (max 8)
V *
Anschluss an Datenausgang
YD002F-X einer FC.....-X
oder an DO einer IS.....-X
Widerstand 31409-700-03
(1% 0,6W Bauform 0207) nur
in den Rundsteckverbinder
der letzten Waage des
Netzwerks einloeten!
Kurzschluss vermeiden!
470
Gehaeuse
Part Name / Benennung
BARRIERE YDI01-Z
Type of sheet / Zeichnungstyp
VERDRAHTUNGSPLAN
WIRING DIAGRAM
Drawing No./Zeichn.-Nr.
65513-000-92-A3
Sheet Blatt 1
of von 1 5 Bl.
Replaces Ers. f.
Replaced by Ers. d
Date Datum
Name
Drawn by Bearb
Checked Geprueft
Approved Freigabe
08.05.98
Klausgrete
SARTORIUS
AG
Goettingen
Version Ausg
Changes Änderung
Date Datum
Name
YDI02Z

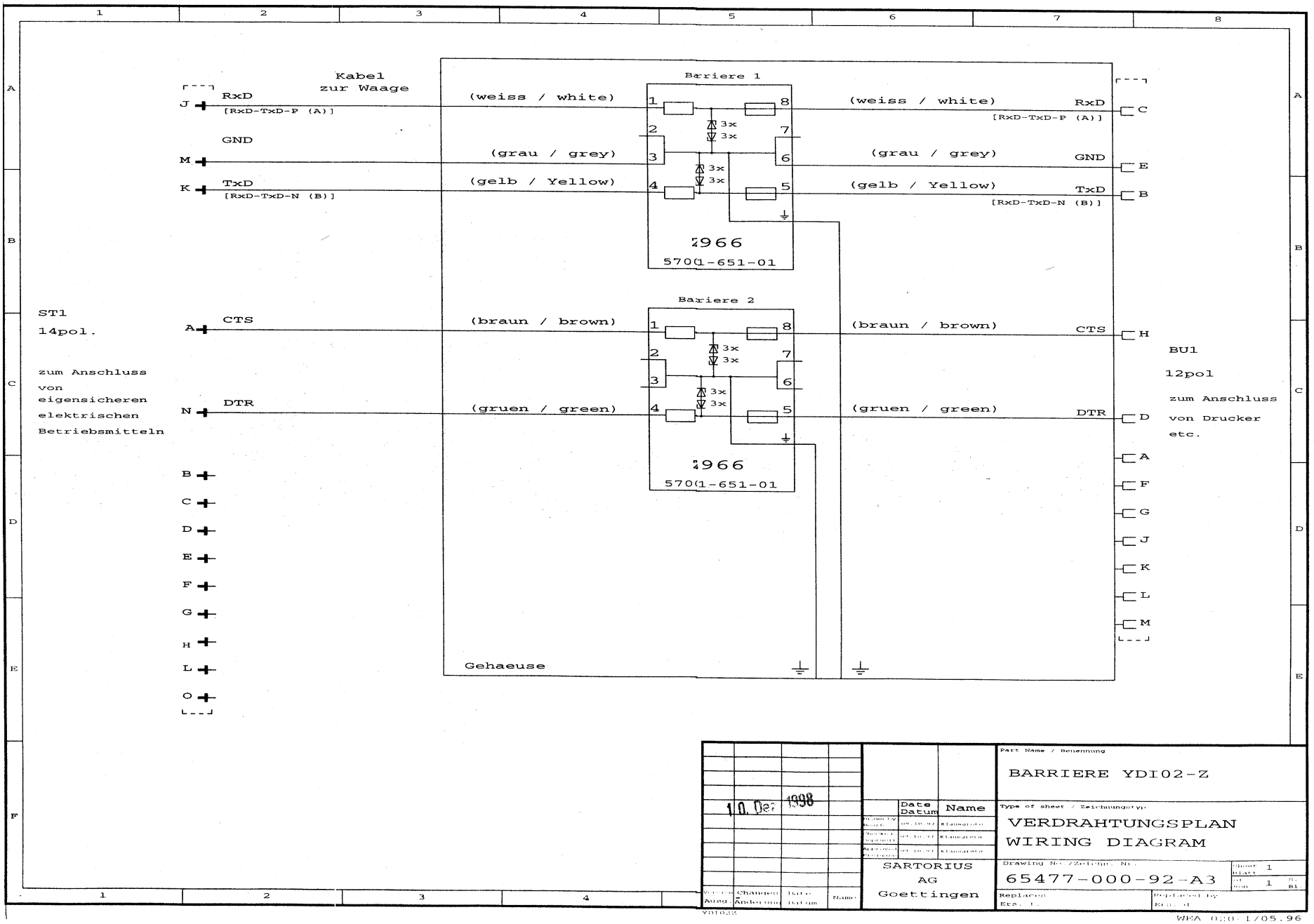
Kabel
zur Waage
RxD
[RxD-TxD-P (A)]
GND
TxD
[RxD-TxD-N (B)]
ST1
14pol.
zum Anschluss
von
eigensicheren
elektrischen
Betriebsmitteln
CTS
DTR
Barriere 1
Barriere 2
(weiss / white)
(grau / grey)
(gelb / Yellow)
(braun / brown)
(gruen / green)
3x
2966
5701-651-01
Gehaeuse
BU1
12pol
zum Anschluss
von Drucker
etc.
10. Dez 1998
Part Name / Benennung
BARRIERE YDI02-Z
Type of sheet / Zeichnungstyp
VERDRAHTUNGSPLAN
WIRING DIAGRAM
Drawing No./Zeichn. Nr.
65477-000-92-A3
SARTORIUS
AG
Goettingen
Date
Datum
Name
Sheet
Blatt
1
of
von
1
Replaces
Ers. f.
Replaced by
Ers. d.
WEA 020-1/05.96

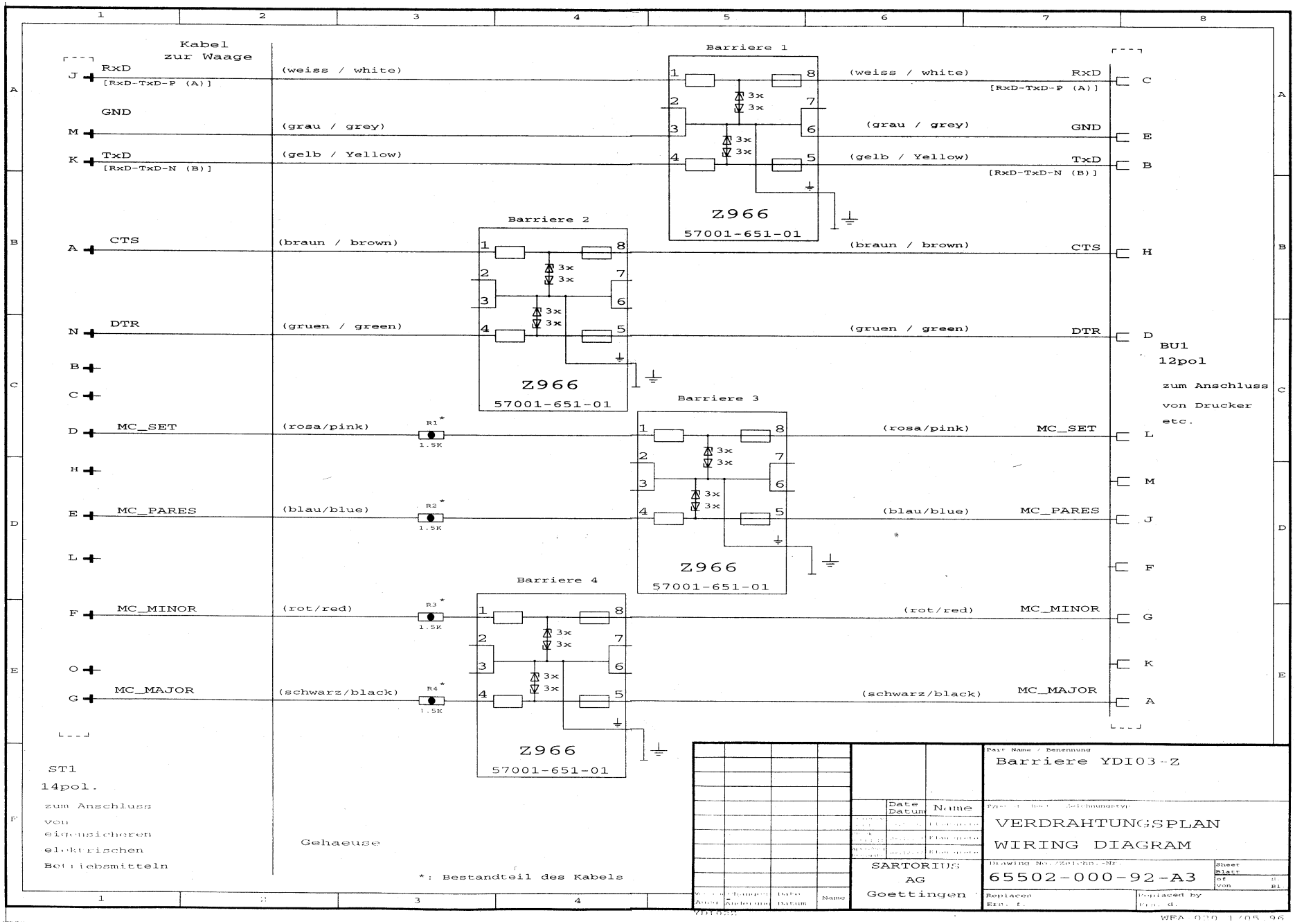
Kabel zur Waage
RxD
[RxD-TxD-P (A)]
GND
TxD
[RxD-TxD-N (B)]
CTS
DTR
MC_SET
MC_PARES
MC_MINOR
MC_MAJOR
(weiss / white)
(grau / grey)
(gelb / Yellow)
(braun / brown)
(gruen / green)
(rosa/pink)
(blau/blue)
(rot/red)
(schwarz/black)
R1*
R2*
R3*
R4*
1.5K
Barriere 1
Barriere 2
Barriere 3
Barriere 4
Z966
57001-651-01
3x
BU1
12pol
zum Anschluss
von Drucker
etc.
ST1
14pol.
zum Anschluss
von
eigensicheren
elektrischen
Betriebsmitteln
Gehaeuse
*: Bestandteil des Kabels
Part Name / Benennung
Barriere YDI03-Z
VERDRAHTUNGSPLAN
WIRING DIAGRAM
SARTORIUS
AG
Goettingen
Drawing No./Zeichn.-Nr.
65502-000-92-A3
Sheet
Blatt
of
von
Replaces
Ers. f.
Replaced by
Ers. d.
Date
Datum
Name
WEA 020 1/05.96

Spare part list EB-X

Stand / Status 08.10.1999 Ersatzteil Spare Part	Index	**Description**	EB6DCE-IX	EB15DCE-IX	EB35EDE-IX	EB60EDE-IX	EB60FEG-IX	EB150FEG-IX	YPS03-XDR	YPS03-XGR	YPS03-XKR
		Power supply in a hazardous area									
		YPS03-XDR, EURO									
		YPS03-XGR, GB									
		YPS03-XKR, USA									
YDC01EA		Dust cover for the Economy Display and	1	1	1	1	1	1			
69EA0034		Display unit without overlay	1	1	1	1					
69EA0035		Display unit (long cable)					1	1			
69EB0003		Overlay	1	1	1	1	1	1			
69EA0021		Holder for display					1	1			
YDH01EA		Stand	1	1							
YDH02EA		Stand			1	1					
YDH04EA		Stand					1	1			
69EA0011		Weighing pan (Dead weight 1000g)	1	1							
69EA0036		Pan (Dead weight 1500g)	1	1							
69EA0004		Weighing pan			1	1					
69EA0017		Weighing pan					1	1			
69EA0022		Shock absorber set					1	1			
69QS0038		Shock absorber set	1	1	1	1					
69PM0047		Main PCB	1	1	1	1	1	1			
69EA0024		Stain Gauge Load Cell	1								
69EA0025		Stain Gauge Load Cell		1							
69EA0026		Stain Gauge Load Cell			1						
69EA0027		Stain Gauge Load Cell				1					
69EA0028		Stain Gauge Load Cell					1				
69EA0029		Stain Gauge Load Cell						1			
69EA0033		Resilient plate (114x60mm)	1	1	1	1					
69EA0008		Cap (electronical box)	1	1	1	1					
69EA0023		Profiled joint (elect. box)					1	1			
69Q10014		Closure plate (DO)	1	1	1	1	1	1			
69LC0048		Plug (diam. 17,5mm, black)	1	1	1	1					
69EA0020		Levelling screws-set	1	1	1	1	1	1			
69EA0010		Holder (level indicator)	1	1	1	1	1	1			
69EA0037		Level indicator					1	1			
69RC0030		Level indicator (1 o/oo)	1	1	1	1					
69LP0019		Profiled joint	1	1	1	1					
69EA0009		Bushing (cable)	1	1	1	1					
69Y03182		Power cable, 3 m (European)							1		
69Y03183		Power cable, 3 m (U.K.)								1	
69Y03184		Power cable, approx. 10 ft. (USA)									1
69Y03185		Secondary cable, 3 m							1	1	
69Y03186		Secondary cable, approx. 10 ft. (USA)									1
69Y03187		Printed circuit board (European & U.K.)							1	1	
69Y03188		Printed circuit board (USA)									1
69Y03189		O-ring (80x2)							1	1	1

EB-x.XLS

Spar part list FC-X

Index	Ersatzteil / Spare Part	Description	FC06BBE-SX	FC06BBE-SXCE	FC12CCE-IXCE	FC12CCE-SX	FC12CCE-SXCE	FC2CCE-SX	FC2CCE-SXCE	FC6CCE-HX	FC6CCE-HXCE	FC6CCE-SX	FC6CCE-SXCE	YPS02-ZDR	YPS02-ZGR	YPS02-ZKR
		Power supplies for installation outside of a hazardous area														
	YPS02-ZDR	EC, 230V	1	1	1	1	1	1	1	1	1	1	1			
	YPS02-ZGR	U.K., 230V	1	1	1	1	1	1	1	1	1	1	1			
	YPS02-ZKR	U.S. and Canada, 115V	1	1	1	1	1	1	1	1	1	1	1			
	69Y03162	PCB												1	1	1
	69Y03164	Connection cable												1	1	1
	69Y03163	Power cord												1		
	69Y03165	Power cord													1	
	69Y03167	Power cord														1
101	69LP0007	Weighing pan, cornered			1	1	1	1	1	1	1	1	1			
102	69LP0008	Frame						1	1	1	1					
103	69FC0007	Hood			1	1	1	1	1	1	1	1	1			
104	69LP0010	Shockabsorber			1	1	1	1	1	1	1	1	1			
105	69LP0023	Glass plate (display)	1	1	1	1	1	1	1	1	1	1	1			
107	69FC0005	Front plate	1	1	1	1	1	1	1	1	1	1	1			
108	69FC0004	Display PCB	1	1	1	1	1	1	1	1	1	1	1			
109	69FC0006	Rear panel (Display)	1	1	1	1	1	1	1	1	1	1	1			
110	69FC0014	Stand	1	1	1	1	1	1	1	1	1	1	1			
111	69FC0015	Hood	1	1												
112	69LP0003	Shieldring	1	1												
113	69LP0005	Supporting pan	1	1												
114	69LP0004	Weighing pan, round	1	1												
115	69LP0040	Draft shield	1	1												
116	69LP0002	Lid for draft shield	1	1												
151	69FC0003	Display module	1	1	1	1	1	1	1	1	1	1	1			
152	6960FB01	Protecting cover	1	1												
152	6960FB02	Protecting cover			1	1	1	1	1	1	1	1	1			
153	6960LP03	Dust cover, display	1	1	1	1	1	1	1	1	1	1	1			
154	69LP0027	Cable (load cell-disp.)	1	1	1	1	1	1	1	1	1	1	1			
155	69B20009	Set of caps (outside)	1	1	1	1	1	1	1	1	1	1	1			
156	69LP0900	Packaging, complete	1	1	1	1	1	1	1	1	1	1	1			

FC-x.XLS

Spare part list FC-X

Index	Ersatzteil / Spare Part	Description	FC06BBE-SX	FC06BBE-SXCE	FC12CCE-IXCE	FC12CCE-SX	FC12CCE-SXCE	FC2CCE-SX	FC2CCE-SXCE	FC6CCE-HX	FC6CCE-HXCE	FC6CCE-SX	FC6CCE-SXCE	YPS02-ZDR	YPS02-ZGR	YPS02-ZKR
157	69LP0950	Collapsible box	1	1	1	1	1	1	1	1	1	1	1			
158	69XT0033	EX-sticker	1	1	1	1	1	1	1	1	1	1	1			
202	69FC0013	DO with power socket	1	1	1	1	1	1	1	1	1	1	1			
203	69B12133	Level indicator	1	1	1	1	1	1	1	1	1	1	1			
204	69LP0026	Support for	1	1	1	1	1	1	1	1	1	1	1			
206	69B20005	Levelling screw	4	4	4	4	4	4	4	4	4	4	4			
207	69FC0008	Main PCB	1	1	1	1	1	1	1	1	1	1	1			
208	69LP0009	Supporting pan			1	1	1	1	1	1	1	1	1			
251	69QS0062	Plug-in connector, with cap	1	1	1	1	1	1	1	1	1	1	1			
252	69LP0019	Profiled joint	1	1	1	1	1	1	1	1	1	1	1			
253	69BP0014*	Operating program	1	1	1	1	1	1	1	1	1	1	1			
301	69U61057	Guide								1	1					
302	69U61060	Leaf spring								1	1					
303	69LC0058	Linkage flexure								1	1					
304	69FC0009	Lever, compl.								1	1					
305	69LP0031	Null indicator, compl.								1	1					
351	69FC0010	PCB for motor	1	1	1	1	1	1	1	1	1	1	1			
352	69FC0011	Micro switch	2	2	2	2	2	2	2	2	2	2	2			
353	69FC0012	Toothed belt	1	1	1	1	1	1	1	1	1	1	1			
401	69B20100	spring	1	1												
401	69LC0032	Leaf spring			1	1	1	1	1			1	1			
402	69LC0031	tension block	1	1	1	1	1	1	1			1	1			
403	69B20027	Linkage flexure	1	1												
403	69LC0030	Linkage flexure			1	1	1	1	1			1	1			
404	69FC0016	Lever, compl.	1	1												
404	69FC0017	Lever, compl.						1	1							
404	69FC0018	Lever, compl.			1	1	1					1	1			
405	69LP0014	Null indicator, compl.	1	1	1	1	1	1	1			1	1			
451	69FC0010	PCB for motor	1	1	1	1	1	1	1	1	1	1	1			
452	69FC0011	Micro switch	2	2	2	2	2	2	2	2	2	2	2			
453	69FC0012	Toothed belt	1	1	1	1	1	1	1	1	1	1	1			
454	69LC0035	Hook	1	1	1	1	1	1	1			1	1			

* unter Angabe von Programm-Nr. bzw. von Ger tetyp und Fabrikationsnummer
please indicate program number or if not available please state the model name and serial number.

FC-x.XLS

Sartorius AG
37070 Goettingen, Germany
Weender Landstraße 94–108, 37075 Goettingen, Germany
(+49/551) 308-0, FAX (+49/551) 308-935
Internet: http://www.sartorius.com
E-mail: Int.Service@Sartorius.com

Copyright by Sartorius AG, Goettingen, Germany.
All rights reserved. No part of this publication
may be reprinted or translated in any form or by any means
without the prior written permission of Sartorius AG.

The status of the information, specifications and illustrations
in this manual is indicated by the date given below.
Sartorius AG reserves the right to make changes to the
technology, features, specifications, and design
of the equipment without notice.

Status: November 1999, Sartorius AG, Goettingen, Germany

Printed in Germany on paper that has been bleached without any use of chlorine · H.K. · M
Publication No.: W-5042-e99111

sartorius