VWR®

Instruction Manual

Dylastir® Stirrer

Dylatherm® Hotplate

Dyla-Dual® Hotplate-Stirrer

Table of Contents

Package Contents 1
Warranty 1
Installation 1
Maintenance & Servicing 1
Environmental Conditions 1
Safety Instructions 2
Specifications 2
Stirring Operating Instructions 2
Heating Operating Instructions 3
Replacement Parts 3

Package Contents

Dylastir Stirrer, Dylatherm Hotplate, or Dyla-Dual Hotplate-Stirrer
72" (183cm) power cord
Stir bar (stirring models only)
Instruction manual

Warranty

Manufacturer warrants this product to be free from defects in material and workmanship when used under normal conditions for two (2) years. Register your equipment or instrument online at: www.vwrsp.com/warranty for US residents or www.vwrcanlab.com/warranty for Canadian residents. For your reference, make a note of the serial number, date of purchase and supplier here.

Serial No.:_____Date of Purchase:_____

Supplier:_____

Installation

Upon receiving the VWR Dylastir/Dylatherm/Dyla-Dual, check to ensure that no damage has occurred in shipment. It is important that any damage that occurred in transport is detected at the time of unpacking. If you do find such damage the carrier must be notified immediately.

After unpacking, place the Dyla Series unit on a level bench or table, away from explosive vapors. Ensure that the surface on which the unit is placed will withstand typical heat produced by the unit and place the unit a minimum of six (6) inches from vertical surfaces. Always place the unit on a sturdy work surface.

The Dyla Series unit is supplied with a 3-prong power cord that should be plugged into a standard 3-prong grounded outlet. If the cord supplied does not meet your needs, please use an approved power cord that suits local codes and electric supply. Replacement of the plug must be made by a qualified electrician.

Maintenance & Servicing

The Dylastir/Dylatherm/Dyla-Dual is built for long, trouble-free, dependable service. No lubrication or other technical user maintenance is required. It needs no user maintenance beyond keeping the surfaces clean. The unit should be given the care normally required for any electrical appliance. Avoid wetting or unnecessary exposure to fumes. Spills should be removed promptly after the unit has cooled down. Do not use a cleaning agent or solvent on the front panel which is abrasive or harmful to plastics, nor one which is flammable. Always ensure the power is disconnected from the unit prior to any cleaning. If the unit ever requires service, contact your VWR representative.

Environmental Conditions

Operating Conditions: Indoor use only.

Temperature: 5 to 40°C (41 to 104°F)
Humidity: 20% to 80% relative humidity, non-condensing
Altitude: 0 to 6,562 ft (2000 M) above sea level

Non-Operating Storage:

Temperature: -20 to 65°C (-4 to 149°F)
Humidity: 20% to 85% relative humidity, non-condensing

Installation Category II and Pollution Degree 2 in accordance with IEC 664.

Safety Instructions

Please read the entire instruction manual before operating the Dylastir/Dylatherm/Dyla-Dual.

WARNING! DO NOT use the Dylastir/Dylatherm/Dyla-Dual in a hazardous atmosphere or with hazardous materials for which the unit was not designed. Also, the user should be aware that the protection provided by the equipment may be impaired if used with accessories not provided or recommended by the manufacturer, or used in a manner not specified by the manufacturer.

Always operate unit on a level surface for best performance and maximum safety.

DO NOT lift unit by the top plate.

CAUTION! To avoid electrical shock, completely cut off power to the unit by disconnecting the power cord from the wall outlet. Disconnect unit from the power supply prior to maintenance and servicing.

Spills should be removed promptly after the unit has cooled down. Alkalis spills, hydrofluoric acid or phosphoric acid spills may damage the unit and lead to thermal failure. **DO NOT** immerse the unit for cleaning.

CAUTION! The top plate can reach 400°C, **DO NOT** touch the heated surface. Use caution at all times. Keep the unit away from explosive vapors and clear of papers, drapery and other flammable materials. Keep the power cord away from the heater plate.

DO NOT operate the unit without a vessel/sample on the top plate.

DO NOT operate the unit if it shows signs of electrical or mechanical damage.

CAUTION! Hotplates are not explosion proof. Use caution when heating volatile materials.

Earth Ground - Protective Conductor Terminal

Alternating Current

Dylastir/Dylatherm/Dyla-Dual Specifications

Overall dimensions (L x W x H): 8.75 x 8 x 4.75" (22.2 x 20.3 x 12.1cm)
Top plate dimensions (Dia.): 6.5" (16.5cm)
Top plate material: aluminum
Electrical (50/60 Hz) Dylastir: 120 volts, .5 amps, 20 watts
230 volts, .25 amps, 20 watts
Dylatherm/Dyla-Dual: 120 volts, 10 amps, 575 watts
230 volts, 5 amps, 575 watts
Temperature range (Dylatherm/Dyla-Dual): to 400°C
Speed range (Dylastir/Dyla-Dual): 100 to 1200rpm
Weight capacity: 1500mL, gross weight should not exceed 10lbs (4.5kg)
Controls: heat knob with indicator light
stir knob with indicator light
Ship weight: 4.6lbs (2.1kg)

Stirring Operating Instructions

1. **Get ready:**
   Turn stir knob to the off position, at the extreme counter-clockwise position. Plug power cord into a standard 3-prong grounded outlet. Place a vessel with the solution and the appropriate accessories in the center of the top plate.
2. **Set speed:**
   Slowly turn the stir knob clockwise until the pointer reaches the desired set speed. The stirrer may initially have to be set at a higher speed to overcome friction in the motor and the material being stirred.
3. **Adjust speed:**
   Speed adjustments can be made without interrupting stirring by turning the indicator knob clockwise to increase speed, or counter-clockwise to decrease speed.
4. **Stop:**
   To stop stirring, turn the stir knob to the extreme counter-clockwise position, until it clicks. Your vessel can then be removed. The stirring knob should be kept in the off position when not in use.

Heating Operating Instructions

1. **Get ready:**
   Turn heat knob to the off position, at the extreme counter-clockwise position. Plug power cord into a standard 3-prong grounded outlet. Place a vessel with the solution and the appropriate accessories in the center of the top plate. This is important because the vessel should be over the hottest part of the top plate.
2. **Set temperature:**
   Turn the heat knob clockwise until the pointer reaches the selected heat setting. As soon as this is done, the red pilot light will flash on and will stay illuminated until the hotplate reaches the selected temperature setting (graduations on the panel surrounding the control knob are reference marks only and do not indicate specific temperatures). The pilot light will continue to light intermittently as the thermostat acts to maintain this temperature. Rotating the heat control to its full on position will bring the hotplate surface to its maximum temperature of about 400°C. After cycling for a short period, the plate temperature should stabilize between 350°C and 400°C, when the control setting is left on "HIGH". To prevent possible damage, however, this position should not be maintained indefinitely. **DO NOT** allow the unit to operate at maximum temperature without a beaker or flask (with fluid) on the top plate.
3. **Adjust temperature:**
   Temperature adjustments can be made without interrupting heating by turning the indicator knob clockwise to increase heat, or counter-clockwise to decrease heat.
4. **Stop:**
   To stop heating, turn the heat knob to the extreme counter-clockwise position. Your vessel can then be removed. The heating knob should be kept in the off position when not in use.

Replacement Parts

Description	Part Number
1. Top plate	242040-00
2. Heater (heating models only)	342008-00
3. Thermostat	342011-00
4. Heat knob	242016-00
5. Stir knob	242017-00
6. Speed control	342007-00
7. Magnet assembly (stirring models only)	486002-00
8. Motor	386027-00
9. Feet	530052-00
10. Power cord	330067-00

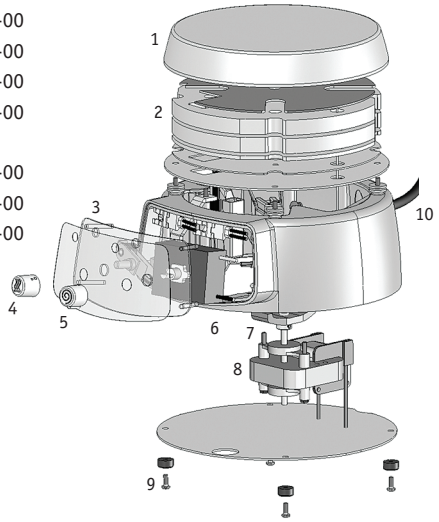

Manufactured by:

HENRY TROEMNER LLC

201 Wolf Drive • PO Box 87 • Thorofare, NJ 08086-0087
Phone: 856-686-1600 • Fax: 856-686-1601 • E-mail: troemner@troemner.com
www.troemner.com

540001-00 (REV 2 - 9/10)